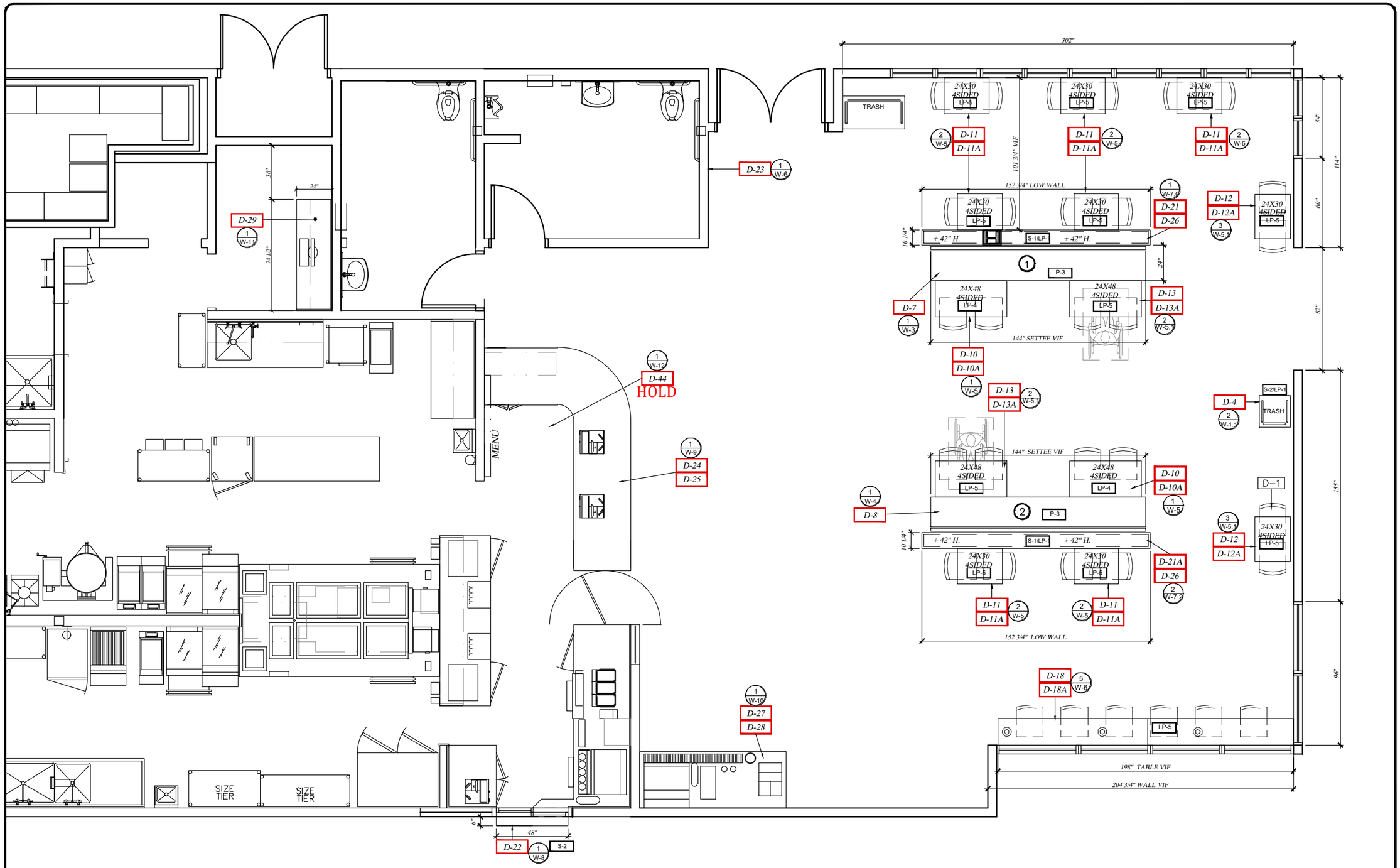

PLAN VIEW

SCALE: 3/16" = 1'-00"

NOT FOR FABRICATION: PROJECT MANAGER: MARCO SUAREZ. _____ DATE: _____

LATEST REVISION No. 2 DATE: 06-27-2023

THESE DRAWINGS REPRESENT DESIGN INTENT ONLY AND DO NOT INCLUDE VERIFICATION OF ANY STRUCTURAL, MECHANICAL, ELECTRICAL, OR LPUMBING. THE DESIGN CONCEPT REPRESENTATION INTENDS TO DEFINE THE SIZE, SHAPE, AND ARRANGEMENT OF SUAREZ CONTRACTING INC., PROJECT COMPONENTS FROM AVAILABLE INFORMATION AND SHALL BE VERIFIED AND APPROVED BY ALL RESPONSIBLE PARTIES INVOLVED IN ORDER TO CONSTRUCT IN COMLPIANCE WITH APLPICABLE CODES, REGULATIONS, ENGINEERING, CALCULATIONS, AND ENVIRONMENTAL CONDITIONS. THIS DRAWING IS PROPERTY OF SUAREZ CONTRACTING INC., AND MUST BE RETURNED UPON REQUEST. ANY USE OF INFORMATION CONTAINED HEREIN FOR USE IN FABRICATION BY ANYONE OTHER THAN SUAREZ CONTRACTING, INC MUST BE AUTHORIZED IN WRITING.

S.C.I.
SUAREZ CONTRACTING INC
ARCHITECTURAL MILLWORK
LICENSE
CSLB 1000000
12165 MADERA WAY, RIVERSIDE, CA 92503
Tel: 951-258-3075, FAX: 951-272-1764

No.	REVISION / ISSUE	DATE	BY
1.	REVISION / ISSUE	06-05-23	AG
2.	REVISION / ISSUE	06-27-23	AG
3.			

APROVED BY

DATE:

MIGUEL'S JR
SANTA ANA
1766 EAST MC FADEN AVE.
SANTA ANA , CA 92705

DRAW BY: ALGUTVER

PROJ. MGR.: MARCO SUAREZ

SCALE:

DATE: 04-13-2023

SHEET: FP

WORK SCHEDULE

ITEM	
W-1	DELETED
W-2	********** MILLWORK PER SHEET D1 ---------- 1 EA. (ITEM # D-4) SINGLE TRASH UNIT ---------- TOP: S-2 SOLID SURFACE WITH (3) TRAY STOPS S-2 Corian Earth ---------- BODY: LP-1 LPASTIC LAMINATE ---------- BASE: METAL FRAME STRUCTURE W/ (4) CASTERS
W-3	********** BOOTHS / UPHOLSTERY 1 EA. (ITEM # D-7) SETTEE 12'-0" LENGTH ---------- BACK & SEAT : SOLID RED OAK WOOD SLATS ---------- METAL FRAME STRUCTURE 1" SQUARE TUBING FINISH IN FLAT BLACK POWDER COAT.
W-4	********** BOOTHS / UPHOLSTERY 1 EA. (ITEM # D-8) SETTEE 12'-0" LENGTH ---------- BACK & SEAT : SOLID RED OAK WOOD SLATS ---------- METAL FRAME STRUCTURE 1" SQUARE TUBING FINISH IN FLAT BLACK POWDER COAT.
W-5	********** TABLES/BASES 2 EA. (ITEM # D-10) TABLE TOPS 24" X 48" W/ LP-4 LP-4 ARBORITE # W-454 EV NATURAL CROSSFIRE PEAR ---------- EDGES : DARK GREY PVC MOLDING ********** TABLES/BASES 4 EA. (ITEM # D-10-A) TABLE BASES (2) PER TOP TWO PRONG BASES 22" X 28" HEIGHT BLACK WRINKLE FINISH ********** TABLES/BASES 7 EA. (ITEM # D-11) TABLE TOPS 24" X 30" W/ LP-5 LP-5 ARBORITE # W-456 EV SILVERED CROSSFIRE PEAR ---------- EDGES : DARK GREY PVC MOLDING ********** TABLES/BASES 7 EA. (ITEM # D-11-A) TABLE BASES FOUR PRONG BASES 22" X 22" X 28" HEIGHT BLACK WRINKLE FINISH **********

WORK SCHEDULE

ITEM	
W-5.1	TABLES/BASES 2 EA. (ITEM # D-12) TABLE TOPS 24" X 30" W/ LP-5 LP-5 ARBORITE # W-456 EV SILVERED CROSSFIRE PEAR ---------- EDGES : DARK GREY PVC MOLDING ********** TABLES/BASES 2 EA. (ITEM # D-12-A) TABLE BASES FOUR PRONG BASES 22" X 22" X 28" HEIGHT BLACK WRINKLE FINISH **********
W-5.1	TABLES/BASES 2 EA. (ITEM # D-13) TABLE TOPS 24" X 48" (H.C.) W/ LP-5 LP-5 ARBORITE # W-456 EV SILVERED CROSSFIRE PEAR ---------- EDGES : DARK GREY PVC MOLDING ********** TABLES/BASES 4 EA. (ITEM # D-13-A) TABLE BASE (H.C.) (2) PER TOP TWO PRONG BASES 22" X 28" HEIGHT BLACK WRINKLE FINISH **********
W-6	MILLWORK 1 EA. (ITEM # D-18) DINING LEDGE ---------- 1-3/16" THICK X 1'-6" DEEP X 16'-6' LENGTH (30" HEIGHT) LP-5 ARBORITE # W-456 EV SILVERED CROSSFIRE PEAR NOTE: VERIFY LAMINATE COLOR ---------- EDGES : DARK GREY PVC MOLDING ********** MILLWORK 3 EA. (ITEM # D-18-A) TALL TABLE BASES 28" HEIGHT BOLT DOWN BASES 28" HEIGHT BLACK WRINKLE FINISH **********
W-7 W-7.1	MILLWORK 1 EA. (ITEM # D-21) LOW WALLS STRAIGHT 12'-6" LENGTH ---------- NOTE: SEE ITEM # D-26 FOR SOLID SURFACE TOP CAP **********
W-8	MILLWORK 1 EA. (ITEM # D-22) DRIVE THRU WINDOW SILL ---------- TOP: S-2 SOLID SURFACE: STARON EARTHEN STRATUM # QL287 ---------- 4-1/2" HIGH X 6" DEPTH X 4'-0" LENGTH **********

WORK SCHEDULE

ITEM	
	MILLWORK (ITEM # D-23) WAINSCOT REWORK BUDGET ALLOWANCE TO REPAIR SMALL AREA IN GLASS ROOM ---------- NOTE: EXISTING WAINSCOT PANELING TO REMAIN AND EXISTING PAINTED CHAIRRAIL TO REMAIN AND PAINTED BY OTHERS **********
W-9	MILLWORK 1 EA. (ITEM # D-24) TOP @ " L " SHAPED ORDER COUNTER SOLID SURFACE TOP S-1 ---------- TOP: 3'-2" DEPTH X 8'-2" X 12'-6" LENGTH ********** MILLWORK 1 EA - (ITEM D-25) FRONT ORDER COUNTER DIE WALL & PANELS ---------- " L " SHAPED MILLWORK FASCIA (24'-0" LINEAL FEET) 2'-4" HEIGHT X 3'-2" X 12'-6" X 8'-2" LENGTH ---------- " L " SHAPED DIE WALLS (24'-0" LINEAL FEET) 2'-8" HEIGHT X 3'-2" X 12'-6" X 8'-2" LENGTH ---------- NOTE: STAINLESS STEEL SUPPORT LEGS & WIRE SHELVING SUPLPIED BY OTHERS **********
W-7 W-7.1	MILLWORK 2 EA. (ITEM # D-26) SOLID SURFACE TOP CAPS @ LOW WALLS 12'-6" LENGTH ---------- TOP: SS-1 SOLID SURFACE FINISH S-1 VERIFY SPECS. ********** MILLWORK 1 EA. (ITEM # D-27) BEVERAGE SOLID SURFACE TOP S-1 ---------- TOP:SOLID SURFACE 3'-3" DEPTH X 8'-2" S-1 FINISH **********
W-10	MILLWORK 1 EA. (ITEM # D-28) LAM. LPASTIC COUNTER FACE LOCATED @ BEVERAGE COUNTER ---------- APPROX. 28" HEIGHT X 11'-6" LINEAL FEET ---------- NOTE: INCLUDES 8'-2" LINEAL FEET ON FRONT FASCIA & 3'-2" LINEAL FEET ON THE L/H SIDE END **********
W-11	MILLWORK 1 EA. (ITEM # D-29) STRAIGHT OFFICE DESK & WALL SHELVES ---------- LOWER CABINET : 42" HEIGHT X 24" DEPTH X 6'-2" LENGHT ---------- (2) UPPER SHELVES 13-1/2" DEPTH X 6'-2" LENGHT **********
W-12	HOLD 1EA (ITEM #D-41) MENU BOARD ---------- 2" THICK X 38" HEIGHT X 6'-3" LENGTH INCLUDES METAL BRACKETS ---------- SOLID RED OAK WOOD STAIN TO MATCH LP-5

FINISH SCHEDULE

ITEM	DESCRIPTION
S-1	SOLID SURFACE : AVONITE-STUDIO COLLECTION, COLOR: CLIFFSIDE F1-7931
S-2	SOLID SURFACE : STARON: # QL287 EARTHEN STRATUM
LP-1	NEVAMAR: EASY ELEGANCE # VA5002
LP-2	PIONITE: D-AT106 GRANDIOSE GRID-SUEDE FINISH
LP-4	ARBORITE: W-454 "EV NATURAL CROSSFIRE PEAR
LP-5	ARBORITE: W-456 "EV SILVERED CROSS FIRE PEAR
LP-7	FORMICA: 464-58 GRAY STONE
LP-8	NEVAMAR: MR6002 CHARCOAL MATRIX
LP-10	FORMNICA: 949-58 WHITE MATTE FINISH
P-3	SOLID RED OAK WOOD - FINISH TO MATCH SAMLPE
P-5	TIGER DRY/AC # RAL 7016 (WAINSCOT TRIM)
P-6	TIGER DRY/AC # RAL 9005 (BOOTH/BANQUETTES, BASES & LOW WALLS)

~ FLOOR PLAN FIELD DIMENSION

SCALE: 3/32"=1'-00"

NOT FOR FABRICATION: PROJECT MANAGER: MARCO SUAREZ. _____ DATE: _____

LATEST REVISION No. 2 DATE:06-27-2023

THESE DRAWINGS REPRESENT DESIGN INTENT ONLY AND DO NOT INCLUDE VERIFICATION OF ANY STRUCTURAL, MECHANICAL, ELECTRICAL, OR LPUMBING. THE DESIGN CONCEPT REPRESENTATION INTENDS TO DEFINE THE SIZE, SHAPE, AND ARRANGEMENT OF SUAREZ CONTRACTING INC., PROJECT COMPONENTS FROM AVAILABLE INFORMATION AND SHALL BE VERIFIED AND APPROVED BY ALL RESPONSIBLE PARTIES INVOLVED IN ORDER TO CONSTRUCT IN COMLPIANCE WITH APLPICABLE CODES, REGULATIONS, ENGINEERING, CALCULATIONS, AND ENVIRONMENTAL CONDITIONS. THIS DRAWING IS PROPERTY OF SUAREZ CONTRACTING INC., AND MUST BE RETURNED UPON REQUEST. ANY USE OF INFORMATION CONTAINED HEREIN FOR USE IN FABRICATION BY ANYONE OTHER THAN SUAREZ CONTRACTING, INC MUST BE AUTHORIZED IN WRITING.

S.C.I. SUAREZ CONTRACTING INC. CABINET & FURNITURE DESIGN
LICENSE # 1000000
12165 MADERA WAY, RIVERSIDE, CA 92503
Tel: 951-258-3075, FAX: 951-272-1764

No.	REVISION / ISSUE	DATE	BY
1.	REVISION / ISSUE	06-05-23	AG
2.	REVISION / ISSUE	06-27-23	AG
3.			

APROVED BY

DATE:

MIGUEL'S JR
SANTA ANA
1766 EAST MC FADEN AVE.
SANTA ANA , CA 92705

DRAW BY ALGUTVER

PROJ. MGR. MARCO SUAREZ

SCALE:

DATE: 04-13-2023

SHEET SCHEDULE

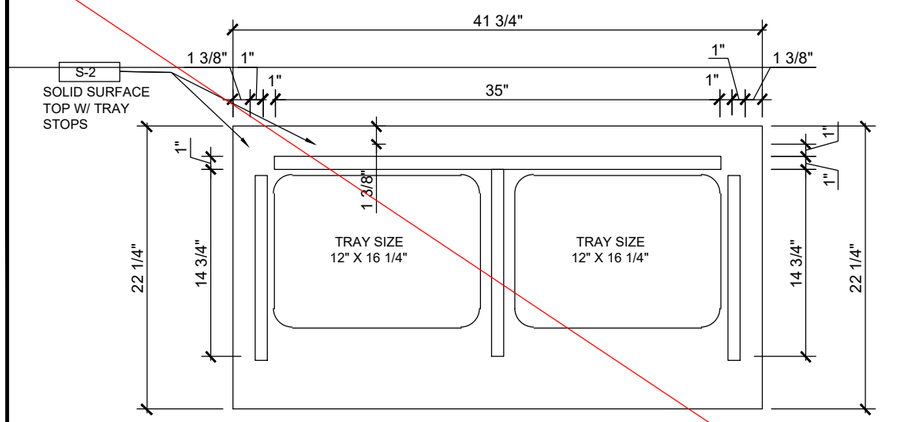

~ FLOOR PLAN
SCALE: 1" = 1'-00"
(1) REQUIRED

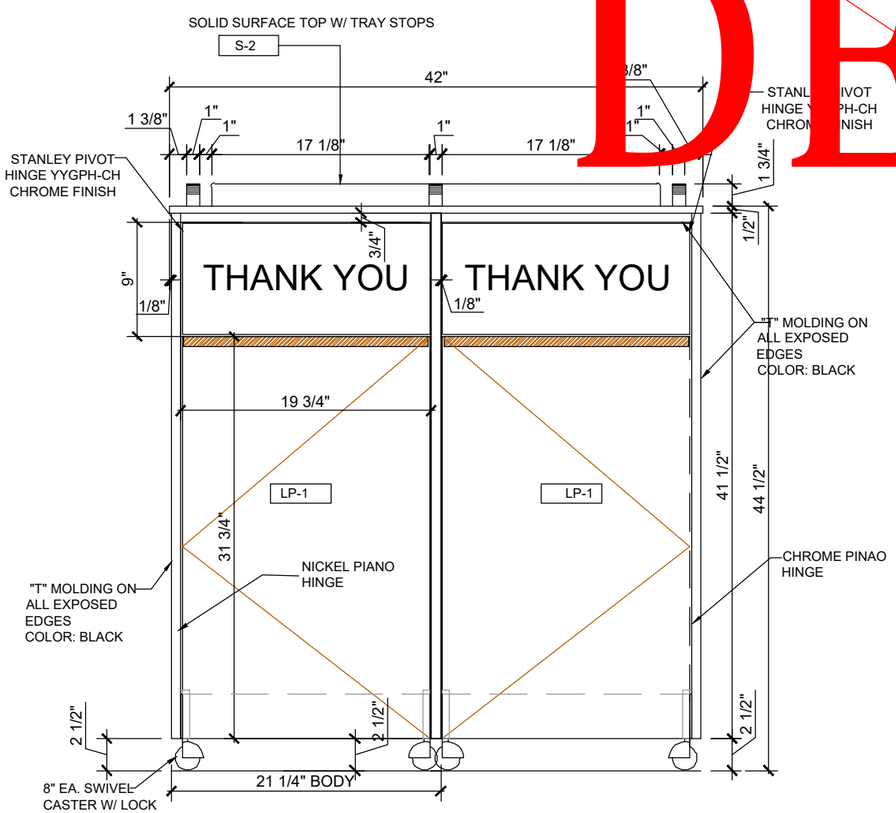

1 ELEVATION
SCALE: 1" = 1'-00"
(1) REQUIRED

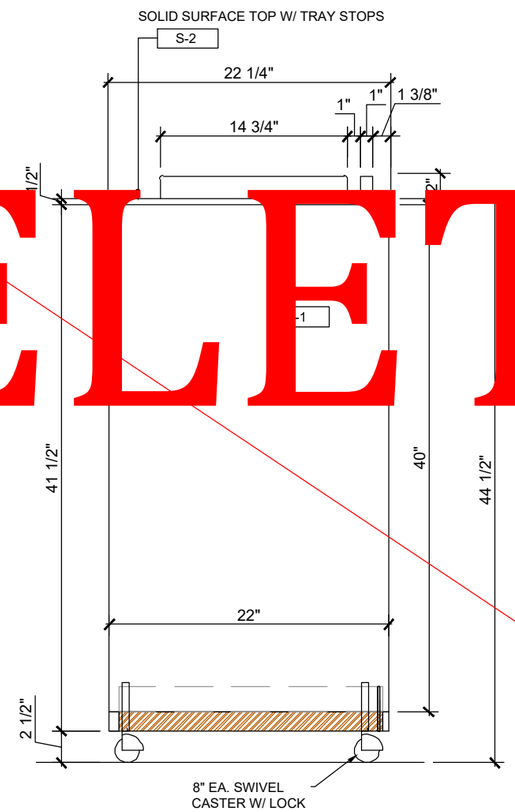

2 ELEVATION
SCALE: 1" = 1'-00"

FINISH SCHEDULE		
ITEM	DESCRIPTION	LOCATION
S-2	PRODUCT: SOLID SURFACE STARON COLOR: EARTH STRATUM #QL287 POLISHED	TOP & SPLASH
LP-1	NEVAMAR: PATTERN: VA5002 COLOR: EASY ELEGANCE	CABINET INTERIOR & EXTERIOR

EXISTING CABINET
NEED (2) 20 GALLON
CONTAINER

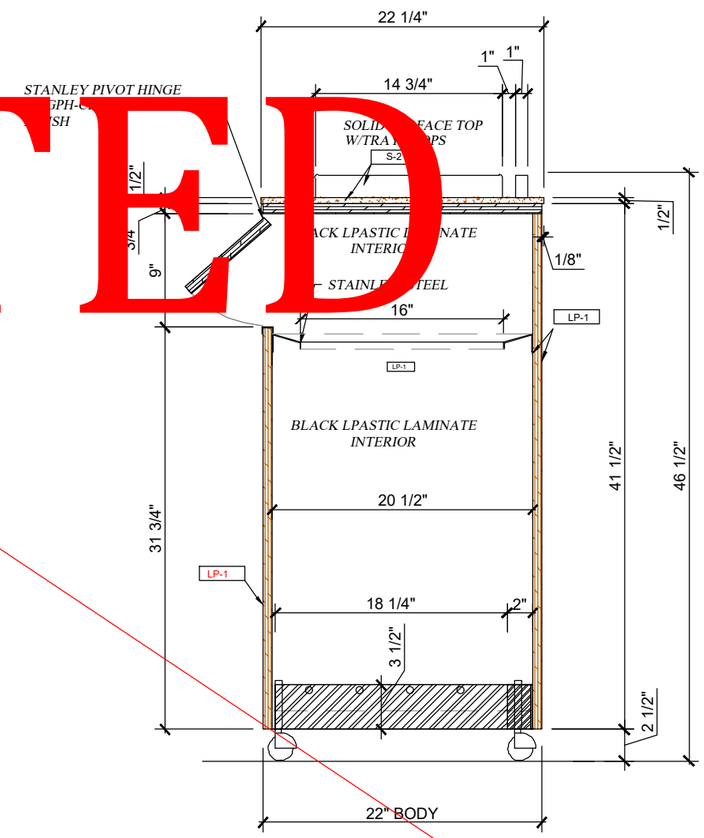

A SECTION WITHOUT CONTAINER
SCALE: 1" = 1'-00"

DELETED

ITEM D-2 DOUBLE TRASH UNIT

NOT FOR FABRICATION: PROJECT MANAGER: MARCO SUAREZ. _____ DATE: _____

LATEST REVISION No. 2 DATE: 06-27-2023

THESE DRAWINGS REPRESENT DESIGN INTENT ONLY AND DO NOT INCLUDE VERIFICATION OF ANY STRUCTURAL, MECHANICAL, ELECTRICAL, OR LPUMBING. THE DESIGN CONCEPT REPRESENTATION INTENDS TO DEFINE THE SIZE, SHAPE, AND ARRANGEMENT OF SUAREZ CONTRACTING INC., PROJECT COMPONENTS FROM AVAILABLE INFORMATION AND SHALL BE VERIFIED AND APPROVED BY ALL RESPONSIBLE PARTIES INVOLVED IN ORDER TO CONSTRUCT IN COMLPIANCE WITH APLPICABLE CODES, REGULATIONS, ENGINEERING, CALCULATIONS, AND ENVIRONMENTAL CONDITIONS. THIS DRAWING IS PROPERTY OF SUAREZ CONTRACTING INC., AND MUST BE RETURNED UPON REQUEST. ANY USE OF INFORMATION CONTAINED HEREIN FOR USE IN FABRICATION BY ANYONE OTHER THAN SUAREZ CONTRACTING, INC MUST BE AUTHORIZED IN WRITING.

S.C.I. STAINLESS CONTRACTING INC
ARCHITECTURAL STAINLESS STEEL FABRICATION & CUSTOM METAL DESIGN
LICENSE # 1000 CSLB
12165 MADERA WAY, RIVERSIDE, CA 92503
Tel: 951-258-3075, FAX: 951-272-1764

No.	REVISION / ISSUE	DATE	BY
1.	REVISION / ISSUE	06-05-23	AG
2.	REVISION / ISSUE	06-27-23	AG
3.			

APROVED BY

DATE:

MIGUEL'S JR
SANTA ANA
1766 EAST MC FADEN AVE.
SANTA ANA , CA 92705

DRAW BY: ALGUTVER
PROJ. MGR.: MARCO SUAREZ
SCALE:
DATE: 04-13-2023
SHEET: W-1

DELETED

FINISH SCHEDULE		
ITEM	DESCRIPTION	LOCATION
S-2	PRODUCT: SOLID SURFACE STARON COLOR: EARTH STRATUM #QL287 POLISHED	TOP & SPLASH
LP-1	NEVAMAR: PATTERN: VA5002 COLOR: EASY ELEGANCE	CABINET INTERIOR & EXTERIOR

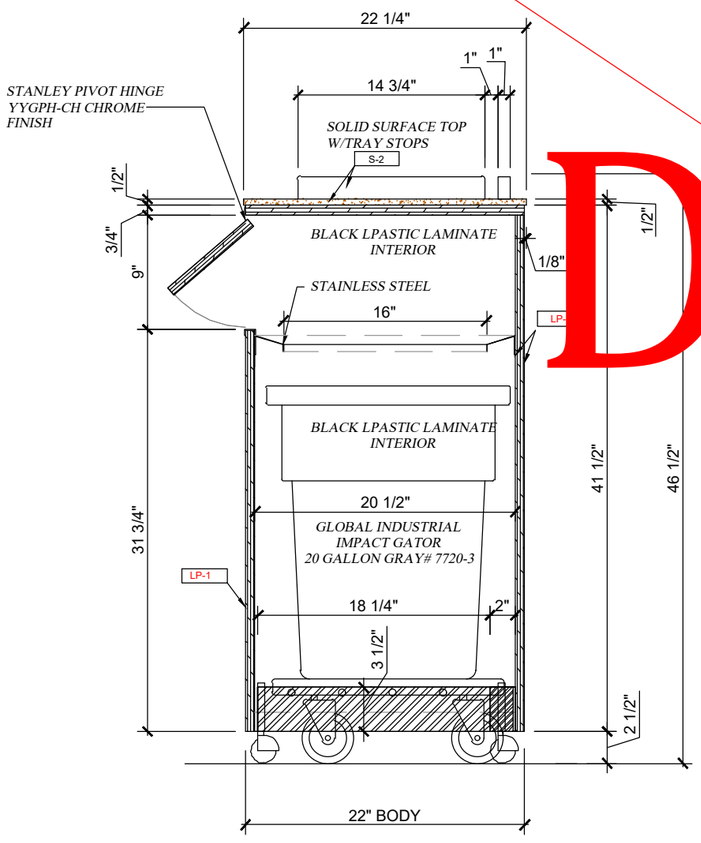

B SECTION WITH CONTAINER
SCALE: 1" = 1'-00"

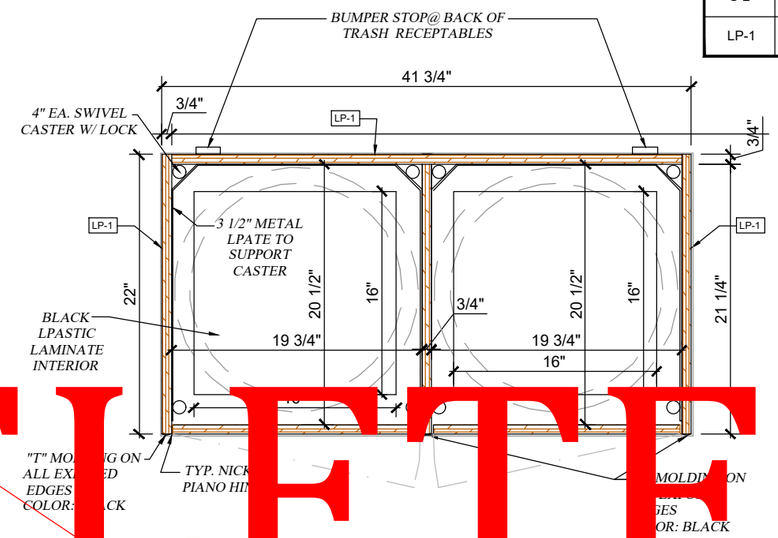

C SECTION WITH CONTAINER
SCALE: 1" = 1'-00"

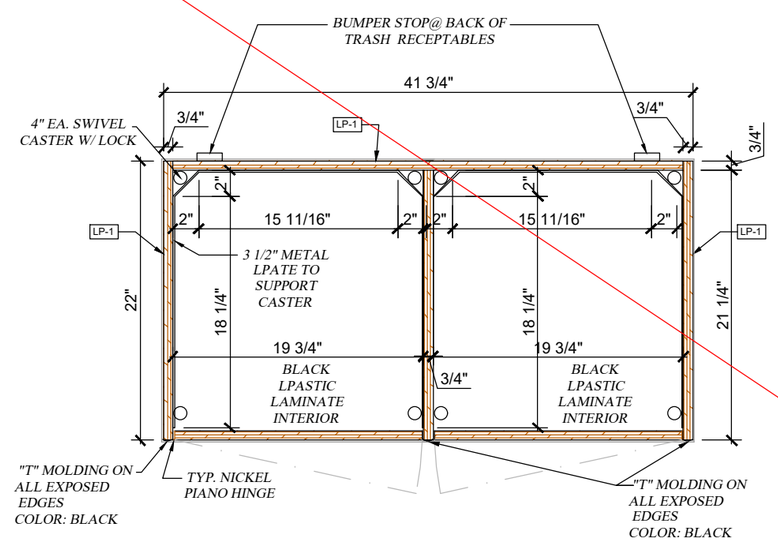

EXISTING CABINET
NEED (2) 20 GALLON
CONTAINER

D SECTION WITHOUT CONTAINER
SCALE: 1" = 1'-00"

ITEM D-2 DOUBLE TRASH UNIT

NOT FOR FABRICATION: PROJECT MANAGER: MARCO SUAREZ. _____ DATE: _____

LATEST REVISION No. 2 DATE: 06-27-2023

THESE DRAWINGS REPRESENT DESIGN INTENT ONLY AND DO NOT INCLUDE VERIFICATION OF ANY STRUCTURAL, MECHANICAL, ELECTRICAL, OR LPUMBING. THE DESIGN CONCEPT REPRESENTATION INTENDS TO DEFINE THE SIZE, SHAPE, AND ARRANGEMENT OF SUAREZ CONTRACTING INC., PROJECT COMPONENTS FROM AVAILABLE INFORMATION AND SHALL BE VERIFIED AND APPROVED BY ALL RESPONSIBLE PARTIES INVOLVED IN ORDER TO CONSTRUCT IN COMLPIANCE WITH APLPICABLE CODES, REGULATIONS, ENGINEERING, CALCULATIONS, AND ENVIRONMENTAL CONDITIONS. THIS DRAWING IS PROPERTY OF SUAREZ CONTRACTING INC., AND MUST BE RETURNED UPON REQUEST. ANY USE OF INFORMATION CONTAINED HEREIN FOR USE IN FABRICATION BY ANYONE OTHER THAN SUAREZ CONTRACTING, INC MUST BE AUTHORIZED IN WRITING.

S.C.I.
SUAREZ CONTRACTING INC
ARCHITECT CABINETRY DESIGN
LICENSE
CSLB 1000
12165 MADERA WAY, RIVERSIDE, CA 92503
Tel: 951-258-3075, FAX: 951-272-1764

No.	REVISION / ISSUE	DATE	BY
1.	REVISION / ISSUE	06-05-23	AG
2.	REVISION / ISSUE	06-27-23	AG
3.			

APROVED BY

DATE:

MIGUEL'S JR
SANTA ANA
1766 EAST MC FADEN AVE.
SANTA ANA , CA 92705

DRAW BY
ALGUTVER

PROJ. MGR.
MARCO SUAREZ

SCALE:

DATE: 04-13-2023

SHEET
W-1.1

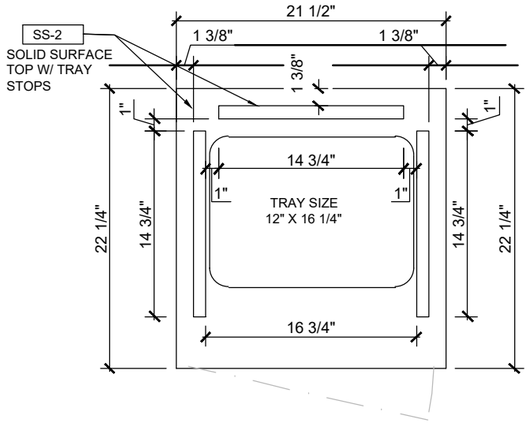

~ FLOOR PLAN
SCALE: 1" = 1'-00"

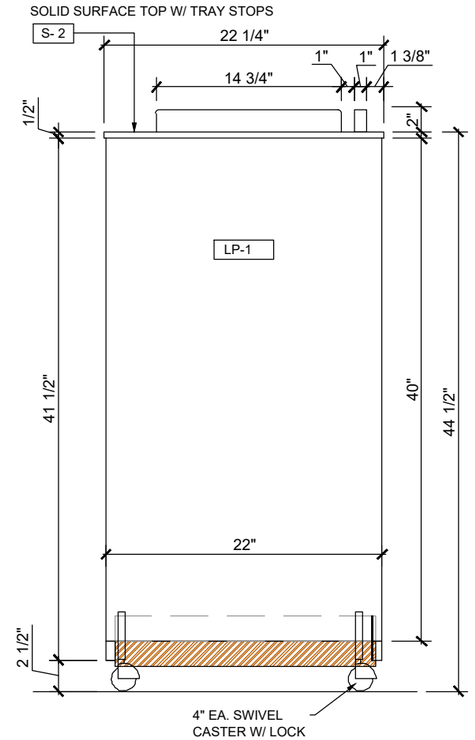

2 ELEVATION
SCALE: 1" = 1'-00"

FINISH SCHEDULE		
ITEM	DESCRIPTION	LOCATION
S-2	PRODUCT: SOLID SURFACE STARON COLOR: EARTH STRATUM #QL287 POLISHED	TOP & SPLASH
LP-1	NEVAMAR: PATTERN: VA5002 COLOR: EASY ELEGANCE	CABINET INTERIOR & EXTERIOR

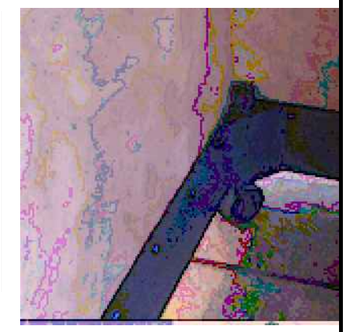

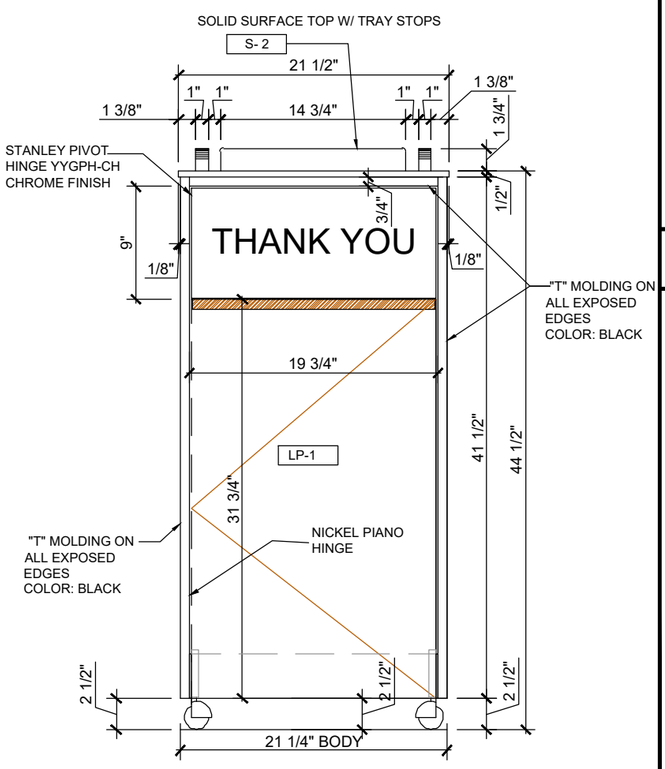

1 ELEVATION
SCALE: 1" = 1'-00"

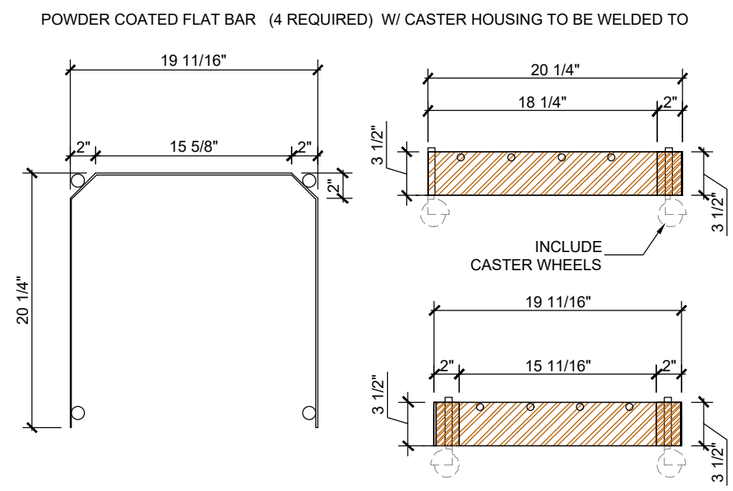

~ POWDER COATED FLAT BAR
SCALE: 1" = 1'-00"

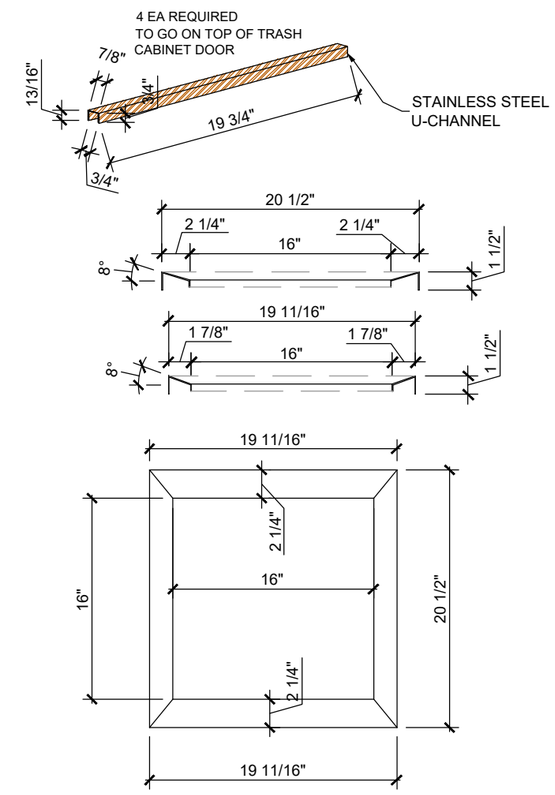

~ STAINLESS TRASH DROP
SCALE: 1" = 1'-00"

ITEM D-4 SINGLE TRASH UNIT

NOT FOR FABRICATION: PROJECT MANAGER: MARCO SUAREZ. _____ DATE: _____

LATEST REVISION No. 2 DATE:06-27-2023

THESE DRAWINGS REPRESENT DESIGN INTENT ONLY AND DO NOT INCLUDE VERIFICATION OF ANY STRUCTURAL, MECHANICAL, ELECTRICAL, OR LPUMBING. THE DESIGN CONCEPT REPRESENTATION INTENDS TO DEFINE THE SIZE, SHAPE, AND ARRANGEMENT OF SUAREZ CONTRACTING INC., PROJECT COMPONENTS FROM AVAILABLE INFORMATION AND SHALL BE VERIFIED AND APPROVED BY ALL RESPONSIBLE PARTIES INVOLVED IN ORDER TO CONSTRUCT IN COMLPIANCE WITH APLPICABLE CODES, REGULATIONS, ENGINEERING, CALCULATIONS, AND ENVIRONMENTAL CONDITIONS. THIS DRAWING IS PROPERTY OF SUAREZ CONTRACTING INC., AND MUST BE RETURNED UPON REQUEST. ANY USE OF INFORMATION CONTAINED HEREIN FOR USE IN FABRICATION BY ANYONE OTHER THAN SUAREZ CONTRACTING, INC MUST BE AUTHORIZED IN WRITING.

S.C.I.
SUAREZ CONTRACTING INC
ARCHITECTURAL MILLWORK & OFFICE STORE FIXTURES
LICENSE 1000000
12165 MADERA WAY, RIVERSIDE, CA 92503
Tel: 951-258-3075, FAX: 951-272-1764

No.	REVISION / ISSUE	DATE	BY
1.	REVISION / ISSUE	06-05-23	AG
2.	REVISION / ISSUE	06-27-23	AG
3.			

APROVED BY

DATE:

MIGUEL'S JR
SANTA ANA
1766 EAST MC FADEN AVE.
SANTA ANA , CA 92705

DRAW BY: ALGUTVER

PROJ. MGR.: MARCO SUAREZ

SCALE:

DATE: 04-13-2023

SHEET: W-2

FINISH SCHEDULE		
ITEM	DESCRIPTION	LOCATION
S-2	PRODUCT: SOLID SURFACE STARON COLOR: EARTH STRATUM #QL287 POLISHED	TOP & SPLASH
LP-1	NEVAMAR: PATTERN: VA5002 COLOR: EASY ELEGANCE	CABINET INTERIOR & EXTERIOR

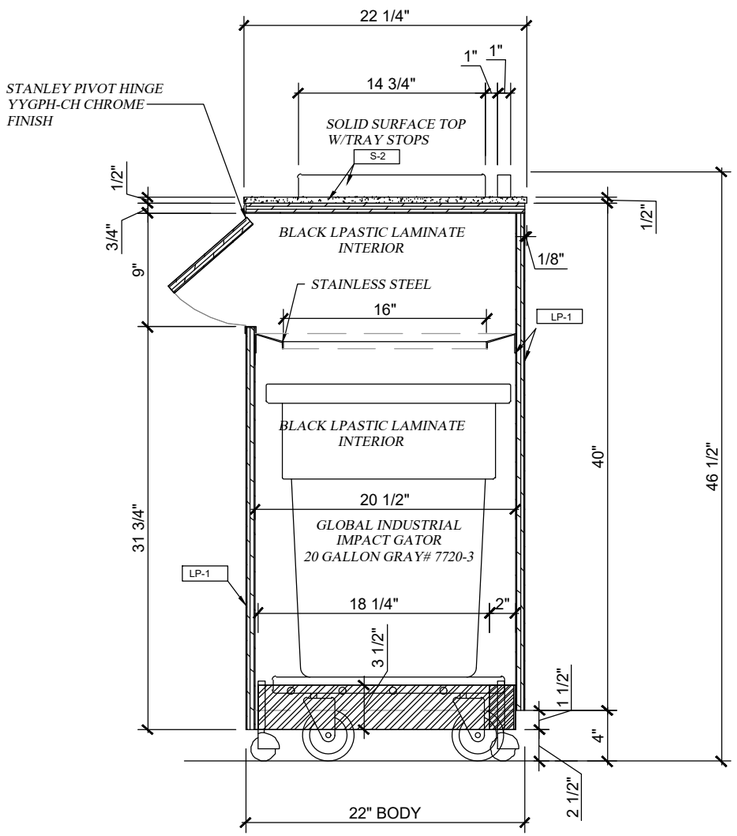

B SECTION WITH CONTAINER
SCALE: 1" = 1'-00"

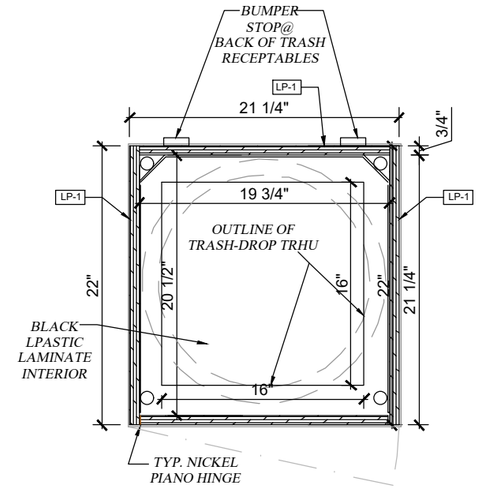

C SECTION WITH CONTAINER
SCALE: 1" = 1'-00"

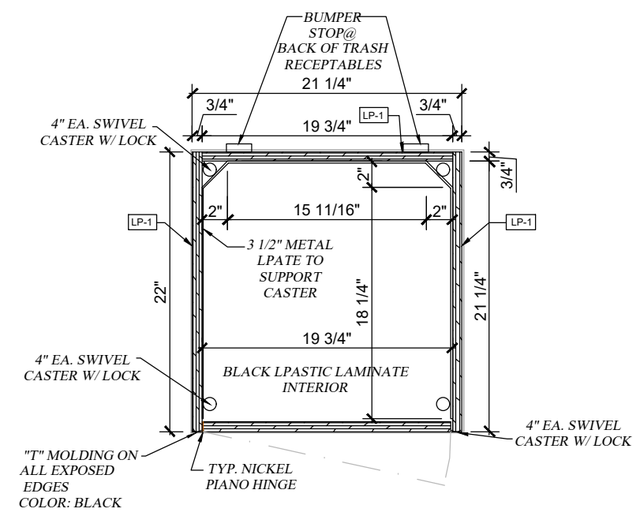

D SECTION WITHOUT CONTAINER
SCALE: 1" = 1'-00"

ITEM D-4 SINGLE TRASH UNIT

NOT FOR FABRICATION: PROJECT MANAGER: MARCO SUAREZ. _____ DATE: _____

LATEST REVISION No. 2 DATE: 06-27-2023

THESE DRAWINGS REPRESENT DESIGN INTENT ONLY AND DO NOT INCLUDE VERIFICATION OF ANY STRUCTURAL, MECHANICAL, ELECTRICAL, OR LPUMBING. THE DESIGN CONCEPT REPRESENTATION INTENDS TO DEFINE THE SIZE, SHAPE, AND ARRANGEMENT OF SUAREZ CONTRACTING INC., PROJECT COMPONENTS FROM AVAILABLE INFORMATION AND SHALL BE VERIFIED AND APPROVED BY ALL RESPONSIBLE PARTIES INVOLVED IN ORDER TO CONSTRUCT IN COMLPIANCE WITH APLPICABLE CODES, REGULATIONS, ENGINEERING, CALCULATIONS, AND ENVIRONMENTAL CONDITIONS. THIS DRAWING IS PROPERTY OF SUAREZ CONTRACTING INC., AND MUST BE RETURNED UPON REQUEST. ANY USE OF INFORMATION CONTAINED HEREIN FOR USE IN FABRICATION BY ANYONE OTHER THAN SUAREZ CONTRACTING, INC MUST BE AUTHORIZED IN WRITING.

S.C.I.
SUAREZ CONTRACTING INC
CABINETS & FURNITURE
CUSTOM
ARCHITECTURAL WOODWORK & INTERIOR DESIGN
12165 MADERA WAY, RIVERSIDE, CA 92503
Tel: 951-258-3075, FAX: 951-272-1764

No.	REVISION / ISSUE	DATE	BY
1.	REVISION / ISSUE	06-05-23	AG
2.	REVISION / ISSUE	06-27-23	AG
3.			

APROVED BY

DATE:

MIGUEL'S JR
SANTA ANA
1766 EAST MC FADEN AVE.
SANTA ANA , CA 92705

DRAW BY
ALGUTVER

PROJ. MGR.
MARCO SUAREZ

SCALE:

DATE: 04-13-2023

SHEET
W-2.1

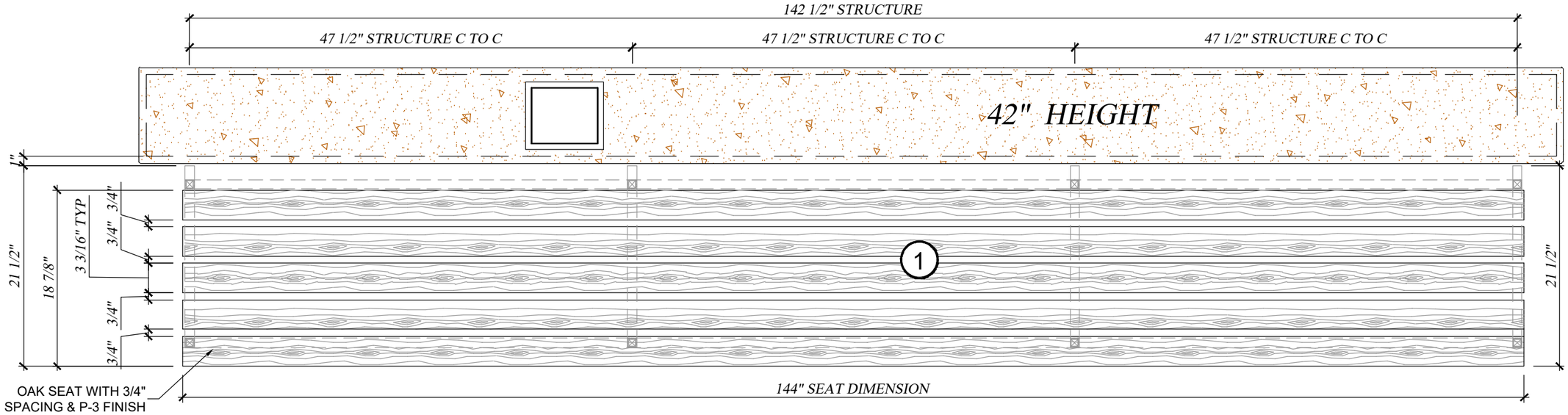

~ FLOOR PLAN
SCALE: 1" = 1'-00"

(1) REQUIRED

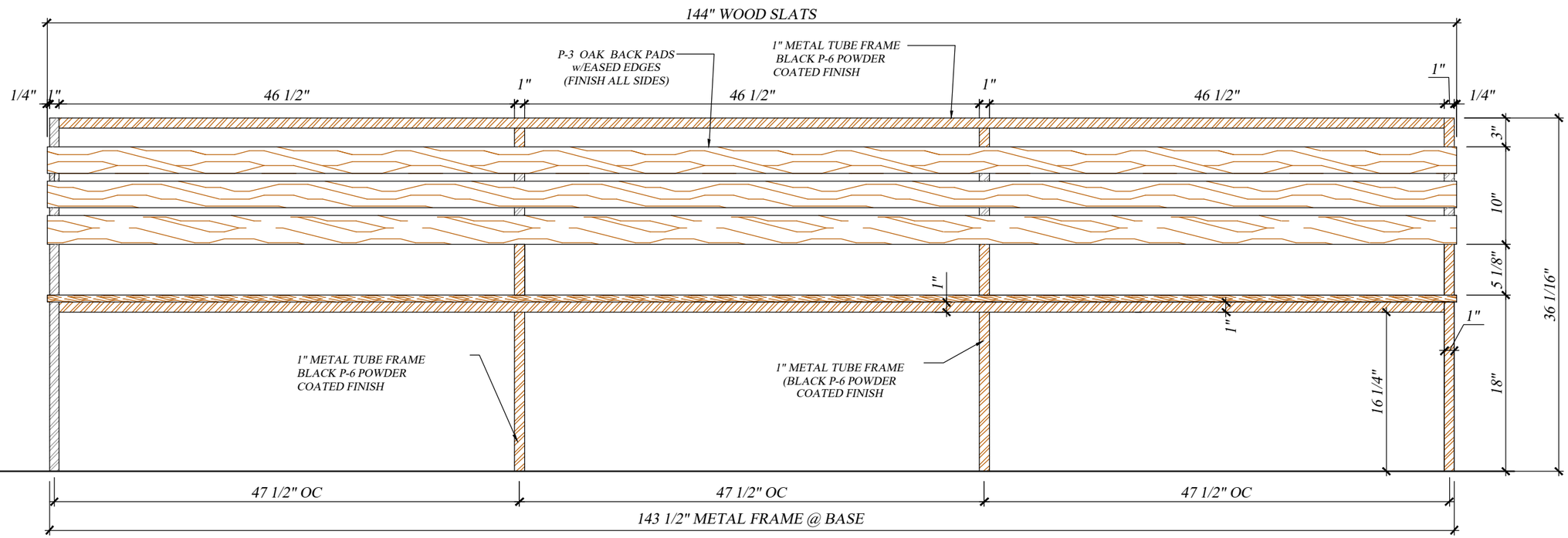

1 ELEVATION
SCALE: 1" = 1'-00"

(1) REQUIRED

ITEM D-7 - SETTEE

NOT FOR FABRICATION: PROJECT MANAGER: MARCO SUAREZ. _____ DATE: _____

LATEST REVISION No. 2 DATE: 06-27-2023

THESE DRAWINGS REPRESENT DESIGN INTENT ONLY AND DO NOT INCLUDE VERIFICATION OF ANY STRUCTURAL, MECHANICAL, ELECTRICAL, OR LPUMBING. THE DESIGN CONCEPT REPRESENTATION INTENDS TO DEFINE THE SIZE, SHAPE, AND ARRANGEMENT OF SUAREZ CONTRACTING INC., PROJECT COMPONENTS FROM AVAILABLE INFORMATION AND SHALL BE VERIFIED AND APPROVED BY ALL RESPONSIBLE PARTIES INVOLVED IN ORDER TO CONSTRUCT IN COMLPIANCE WITH APLPICABLE CODES, REGULATIONS, ENGINEERING, CALCULATIONS, AND ENVIRONMENTAL CONDITIONS. THIS DRAWING IS PROPERTY OF SUAREZ CONTRACTING INC., AND MUST BE RETURNED UPON REQUEST. ANY USE OF INFORMATION CONTAINED HEREIN FOR USE IN FABRICATION BY ANYONE OTHER THAN SUAREZ CONTRACTING, INC MUST BE AUTHORIZED IN WRITING.

S.C.I.
SUAREZ CONTRACTING INC
CABINET & MILLWORK MANUFACTURER
LICENSE
CSLB 1000
12165 MADERA WAY, RIVERSIDE, CA 92503
Tel: 951-258-3075, FAX: 951-272-1764

No.	REVISION / ISSUE	DATE	BY
1.	REVISION / ISSUE	06-05-23	AG
2.	REVISION / ISSUE	06-27-23	AG
3.			

APROVED BY

DATE:

MIGUEL'S JR
SANTA ANA
1766 EAST MC FADEN AVE.
SANTA ANA , CA 92705

DRAW BY
ALGUTVER

PROJ. MGR.
MARCO SUAREZ

SCALE:

DATE: 04-13-2023

SHEET
W-3

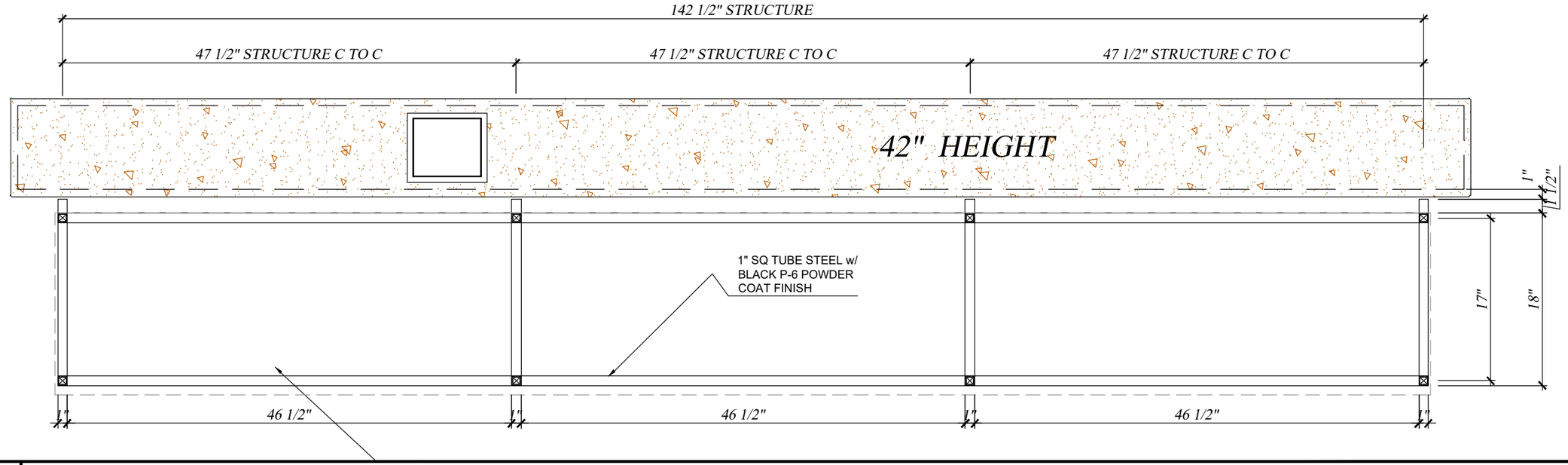

~ PLAN SECTION
SCALE: 1" = 1'-00"

(1) REQUIRED

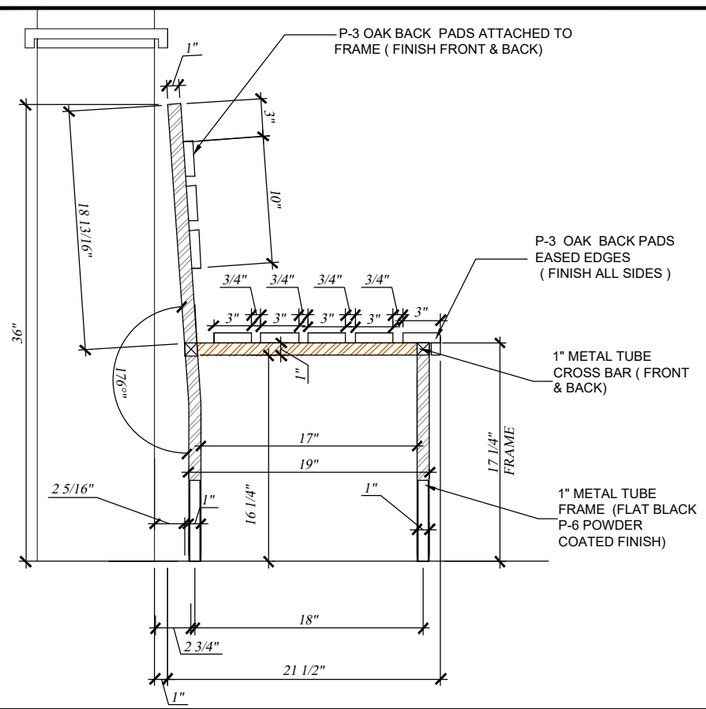

A SECTION
SCALE: 1" = 1'-00"

FINISH SCHEDULE		
ITEM	DESCRIPTION	LOCATION
P-3	PAINT OR STAIN AS PER APPROVED SAMLPE	BANQUETTE SLATS
P-6	TIGER DRY/AC RAL 9005 BLACK MATTE	LEGS BOOTHS & SETTEE

ITEM D-7 SETTEE

NOT FOR FABRICATION: PROJECT MANAGER: MARCO SUAREZ. _____ DATE: _____

LATEST REVISION No. 2 DATE: 06-27-2023

THESE DRAWINGS REPRESENT DESIGN INTENT ONLY AND DO NOT INCLUDE VERIFICATION OF ANY STRUCTURAL, MECHANICAL, ELECTRICAL, OR LPUMBING. THE DESIGN CONCEPT REPRESENTATION INTENDS TO DEFINE THE SIZE, SHAPE, AND ARRANGEMENT OF SUAREZ CONTRACTING INC., PROJECT COMPONENTS FROM AVAILABLE INFORMATION AND SHALL BE VERIFIED AND APPROVED BY ALL RESPONSIBLE PARTIES INVOLVED IN ORDER TO CONSTRUCT IN COMLPIANCE WITH APLPICABLE CODES, REGULATIONS, ENGINEERING, CALCULATIONS, AND ENVIRONMENTAL CONDITIONS. THIS DRAWING IS PROPERTY OF SUAREZ CONTRACTING INC., AND MUST BE RETURNED UPON REQUEST. ANY USE OF INFORMATION CONTAINED HEREIN FOR USE IN FABRICATION BY ANYONE OTHER THAN SUAREZ CONTRACTING, INC MUST BE AUTHORIZED IN WRITING.

S.C.I.
SUAREZ CONTRACTING INC
CABINET & MILLWORK MANUFACTURER & DESIGN
LICENSE
CSLB 1000 CLASS C-6
12165 MADERA WAY, RIVERSIDE, CA 92503
Tel: 951-258-3075, FAX: 951-272-1764

No.	REVISION / ISSUE	DATE	BY
1.	REVISION / ISSUE	06-05-23	AG
2.	REVISION / ISSUE	06-27-23	AG
3.			

APROVED BY

DATE:

MIGUEL'S JR
SANTA ANA
1766 EAST MC FADEN AVE.
SANTA ANA , CA 92705

DRAW BY
ALGUTVER

PROJ. MGR.
MARCO SUAREZ

SCALE:

DATE: 04-13-2023

SHEET
W-3 .1

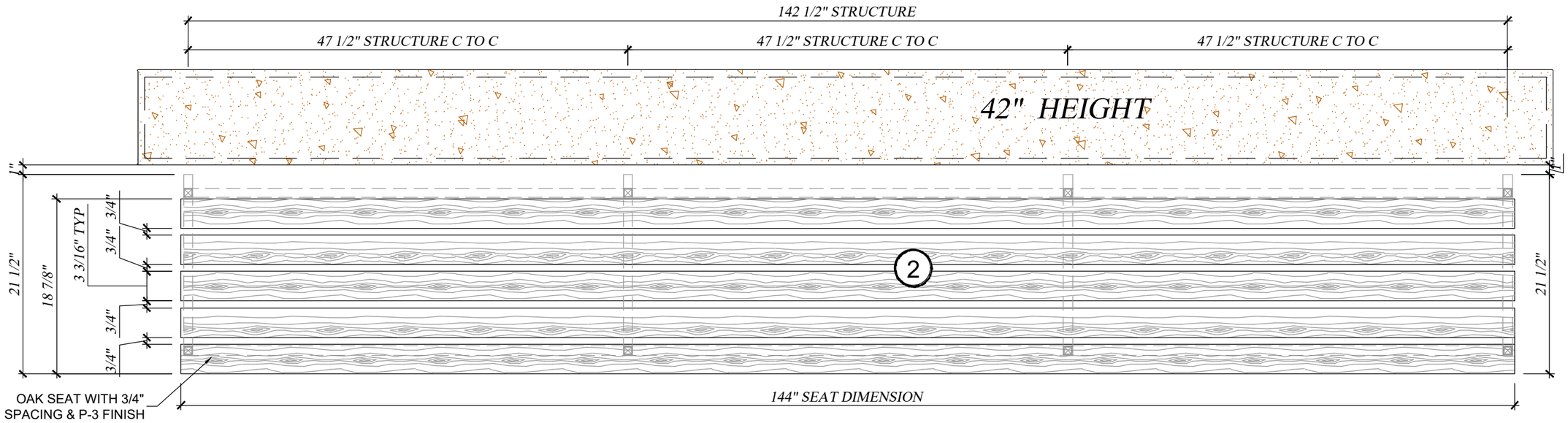

~ FLOOR PLAN
SCALE: 1" = 1'-00"

(1) REQUIRED

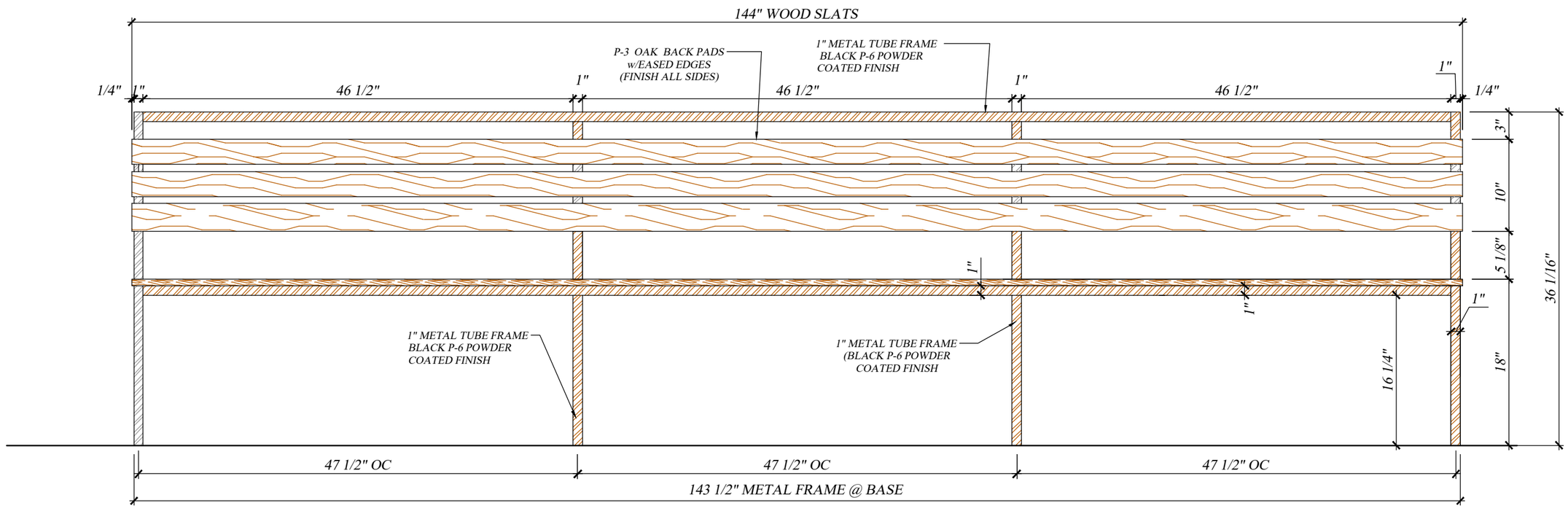

1 ELEVATION
SCALE: 1" = 1'-00"

ITEM D-8 - SETTEE

NOT FOR FABRICATION: PROJECT MANAGER: MARCO SUAREZ. _____ DATE: _____

LATEST REVISION No. 2 DATE: 06-27-2023

THESE DRAWINGS REPRESENT DESIGN INTENT ONLY AND DO NOT INCLUDE VERIFICATION OF ANY STRUCTURAL, MECHANICAL, ELECTRICAL, OR LPUMBING. THE DESIGN CONCEPT REPRESENTATION INTENDS TO DEFINE THE SIZE, SHAPE, AND ARRANGEMENT OF SUAREZ CONTRACTING INC., PROJECT COMPONENTS FROM AVAILABLE INFORMATION AND SHALL BE VERIFIED AND APPROVED BY ALL RESPONSIBLE PARTIES INVOLVED IN ORDER TO CONSTRUCT IN COMLPIANCE WITH APLPICABLE CODES, REGULATIONS, ENGINEERING, CALCULATIONS, AND ENVIRONMENTAL CONDITIONS. THIS DRAWING IS PROPERTY OF SUAREZ CONTRACTING INC., AND MUST BE RETURNED UPON REQUEST. ANY USE OF INFORMATION CONTAINED HEREIN FOR USE IN FABRICATION BY ANYONE OTHER THAN SUAREZ CONTRACTING, INC MUST BE AUTHORIZED IN WRITING.

S.C.I.
SUAREZ CONTRACTING INC
ARCHITECTURAL CABINETRY DESIGN
LICENSE
1000663
12165 MADERA WAY, RIVERSIDE, CA 92503
Tel: 951-258-3075, FAX: 951-272-1764

No.	REVISION / ISSUE	DATE	BY
1.	REVISION / ISSUE	06-05-23	AG
2.	REVISION / ISSUE	06-27-23	AG
3.			

APROVED BY

DATE:

MIGUEL'S JR
SANTA ANA
1766 EAST MC FADEN AVE.
SANTA ANA , CA 92705

DRAW BY
ALGUTVER

PROJ. MGR.
MARCO SUAREZ

SCALE:

DATE: 04-13-2023

SHEET
W-4

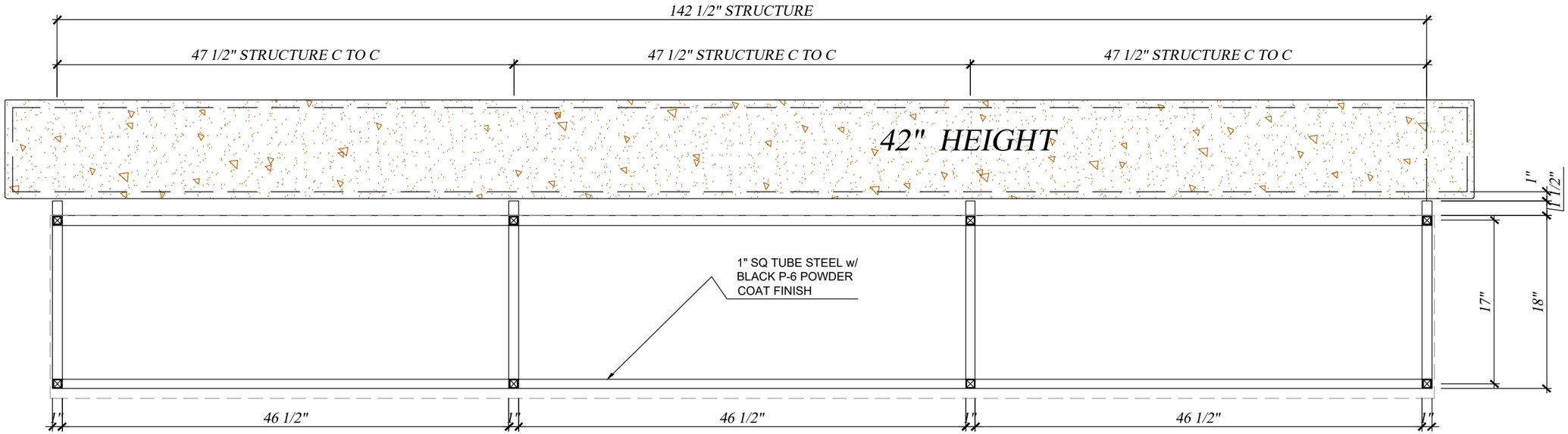

~ PLAN SECTION
SCALE: 1" = 1'-00"

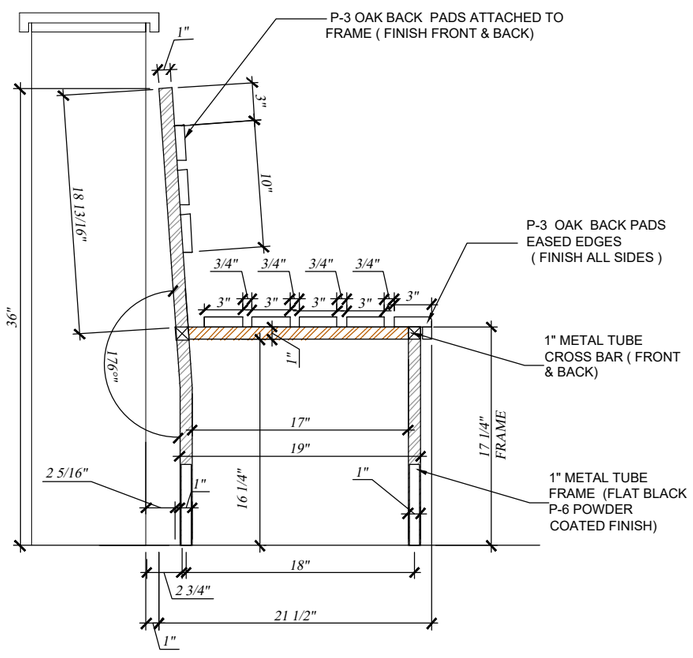

FINISH SCHEDULE		
ITEM	DESCRIPTION	LOCATION
P-3	PAINT OR STAIN AS PER APPROVED SAMLPE	BANQUETTE SLATS
P-6	TIGER DRY/AC RAL 9005 BLACK MATTE	LEGS BOOTHS & SETTEE

A SECTION
SCALE: 1" = 1'-00"

ITEM D-8 SETTEE

NOT FOR FABRICATION: PROJECT MANAGER: MARCO SUAREZ. _____ DATE: _____

LATEST REVISION No. 2 DATE: 06-27-2023

THESE DRAWINGS REPRESENT DESIGN INTENT ONLY AND DO NOT INCLUDE VERIFICATION OF ANY STRUCTURAL, MECHANICAL, ELECTRICAL, OR LPUMBING. THE DESIGN CONCEPT REPRESENTATION INTENDS TO DEFINE THE SIZE, SHAPE, AND ARRANGEMENT OF SUAREZ CONTRACTING INC., PROJECT COMPONENTS FROM AVAILABLE INFORMATION AND SHALL BE VERIFIED AND APPROVED BY ALL RESPONSIBLE PARTIES INVOLVED IN ORDER TO CONSTRUCT IN COMLPIANCE WITH APLPICABLE CODES, REGULATIONS, ENGINEERING, CALCULATIONS, AND ENVIRONMENTAL CONDITIONS. THIS DRAWING IS PROPERTY OF SUAREZ CONTRACTING INC., AND MUST BE RETURNED UPON REQUEST. ANY USE OF INFORMATION CONTAINED HEREIN FOR USE IN FABRICATION BY ANYONE OTHER THAN SUAREZ CONTRACTING, INC MUST BE AUTHORIZED IN WRITING.

S.C.I.
SUAREZ CONTRACTING INC
CUSTOM CABINETS & FURNITURE DESIGN
LICENSE
CSLB 1000 CA
12165 MADERA WAY, RIVERSIDE, CA 92503
Tel: 951-258-3075, FAX: 951-272-1764

No.	REVISION / ISSUE	DATE	BY
1.	REVISION / ISSUE	06-05-23	AG
2.	REVISION / ISSUE	06-27-23	AG
3.			

APROVED BY

DATE:

MIGUEL'S JR
SANTA ANA
1766 EAST MC FADEN AVE.
SANTA ANA , CA 92705

DRAW BY
ALGUTVER

PROJ. MGR.
MARCO SUAREZ

SCALE:

DATE: 04-13-2023

SHEET
W-4.1

FINISH SCHEDULE

ITEM	DESCRIPTION
LP-4	ARBORITE # W-454 EV NATURAL CROSSFIRE PEAR

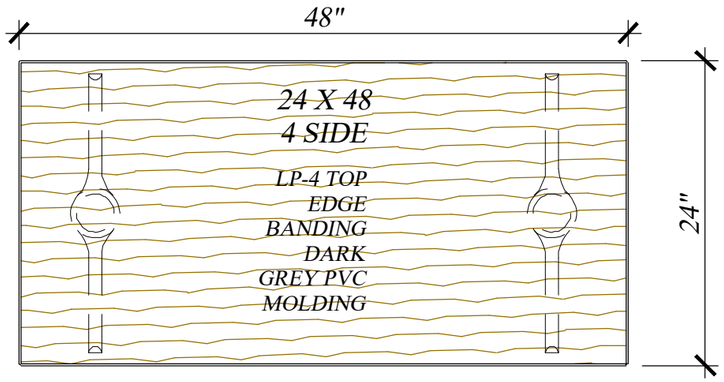

FINISH SCHEDULE

ITEM	DESCRIPTION
LP-5	ARBORITE # W-456 EV SILVERED CROSSFIRE PEAR

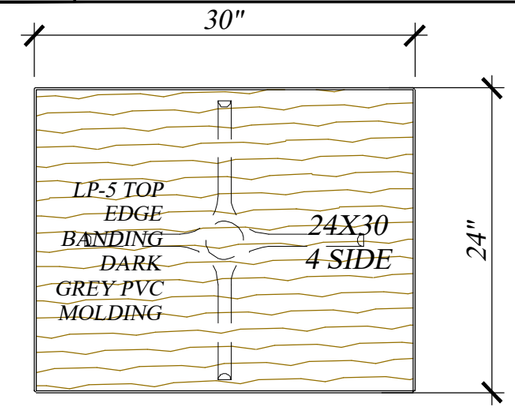

~ FLOOR PLAN - ITEM D-10 (2) REQUIRED
SCALE: 1" = 1'-00"

~ FLOOR PLAN - ITEM D-11 (7) REQUIRED
SCALE: 1" = 1'-00"

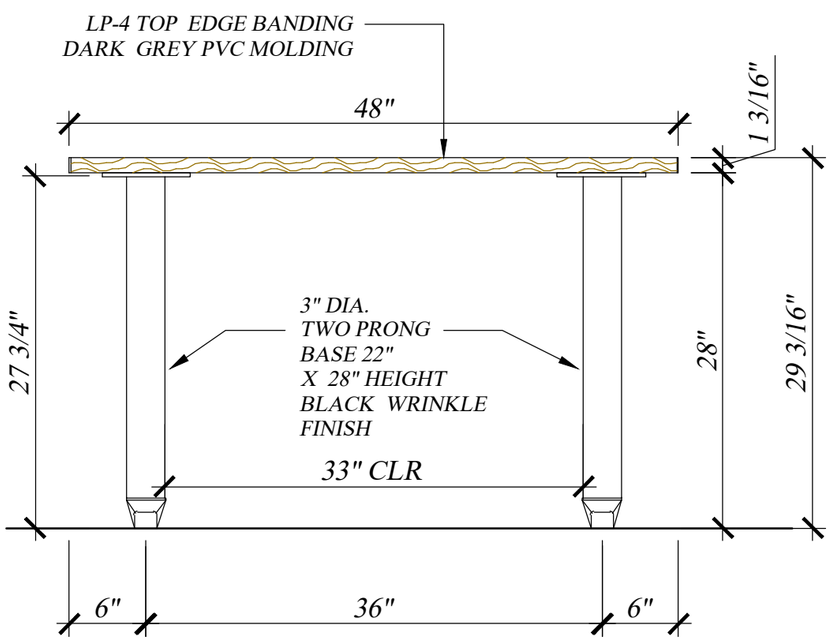

1 ELEVATION - ITEM D-10 & 10-A (2) REQUIRED
SCALE: 1" = 1'-00"

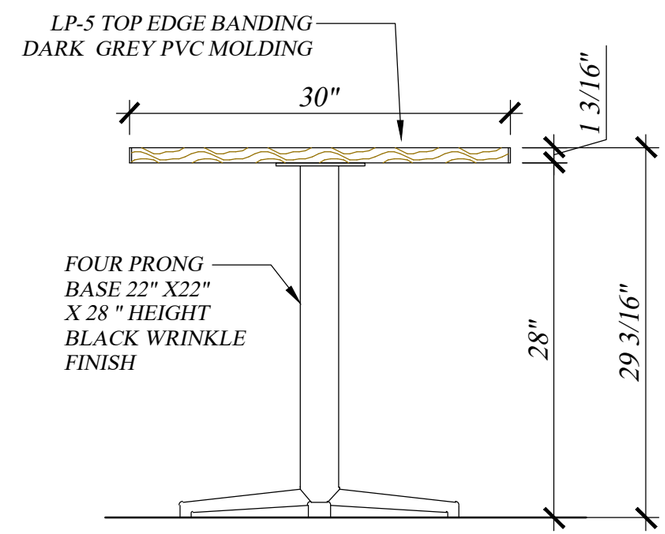

2 ELEVATION ITEM D-11 & D-11A (7) REQUIRED
SCALE: 1" = 1'-00"

ITEM D-10 AND D-11 TABLES

NOT FOR FABRICATION: PROJECT MANAGER: MARCO SUAREZ. _____ DATE: _____

LATEST REVISION No. 2 DATE: 06-27-2023

THESE DRAWINGS REPRESENT DESIGN INTENT ONLY AND DO NOT INCLUDE VERIFICATION OF ANY STRUCTURAL, MECHANICAL, ELECTRICAL, OR LPUMBING. THE DESIGN CONCEPT REPRESENTATION INTENDS TO DEFINE THE SIZE, SHAPE, AND ARRANGEMENT OF SUAREZ CONTRACTING INC., PROJECT COMPONENTS FROM AVAILABLE INFORMATION AND SHALL BE VERIFIED AND APPROVED BY ALL RESPONSIBLE PARTIES INVOLVED IN ORDER TO CONSTRUCT IN COMLPIANCE WITH APLPICABLE CODES, REGULATIONS, ENGINEERING, CALCULATIONS, AND ENVIRONMENTAL CONDITIONS. THIS DRAWING IS PROPERTY OF SUAREZ CONTRACTING INC., AND MUST BE RETURNED UPON REQUEST. ANY USE OF INFORMATION CONTAINED HEREIN FOR USE IN FABRICATION BY ANYONE OTHER THAN SUAREZ CONTRACTING, INC MUST BE AUTHORIZED IN WRITING.

S.C.I.
SUAREZ CONTRACTING INC
CABINETS
CUSTOM FURNITURE
ARCHITECTURAL MILLWORK
12165 MADERA WAY, RIVERSIDE, CA 92503
Tel: 951-258-3075, FAX: 951-272-1764

No.	REVISION / ISSUE	DATE	BY
1.	REVISION / ISSUE	06-05-23	AG
2.	REVISION / ISSUE	06-27-23	AG
3.			

APROVED BY

DATE:

MIGUEL'S JR
SANTA ANA
1766 EAST MC FADEN AVE.
SANTA ANA , CA 92705

DRAW BY ALGUTVER

PROJ. MGR. MARCO SUAREZ

SCALE:

DATE: 04-13-2023

SHEET W-5

FINISH SCHEDULE

ITEM	DESCRIPTION
LP-5	ARBORITE # W-456 EV SILVERED CROSSFIRE PEAR

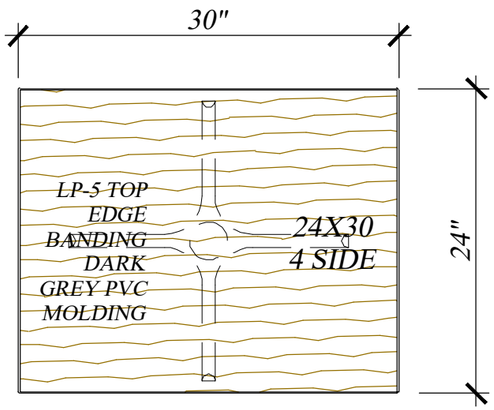

~ FLOOR PLAN - ITEM D-12 (2) REQUIRED
SCALE: 1" = 1'-00"

FINISH SCHEDULE

ITEM	DESCRIPTION
LP-5	ARBORITE # W-456 EV SILVERED CROSSFIRE PEAR

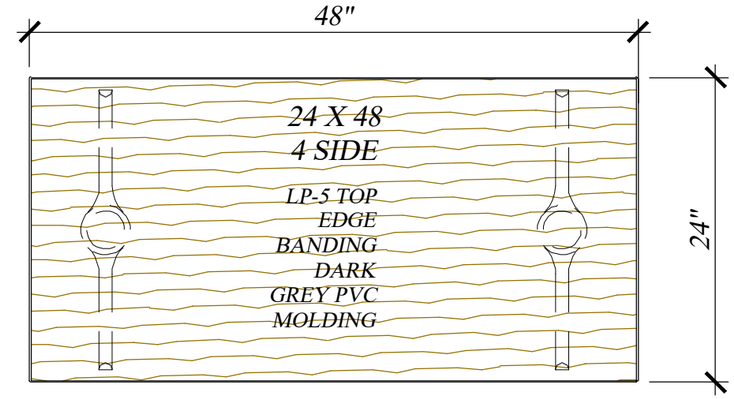

~ FLOOR PLAN - ITEM D-13 - ADA (2) REQUIRED
SCALE: 1" = 1'-00"

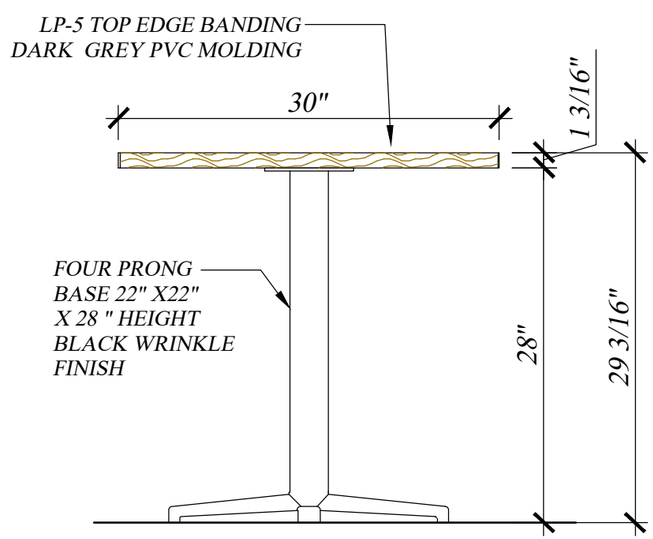

3 ELEVATION - ITEM D-12 & 12-A (2) REQUIRED
SCALE: 1" = 1'-00"

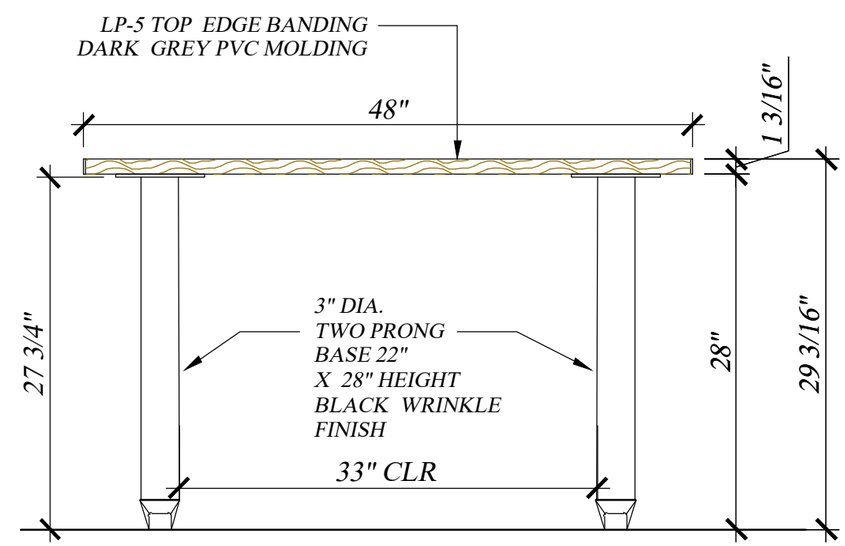

4 ELEVATION ITEM D-13 & D-13A ADA (2) REQUIRED
SCALE: 1" = 1'-00"

ITEM D-12 AND D-13 TABLES

NOT FOR FABRICATION: PROJECT MANAGER: MARCO SUAREZ. _____ DATE: _____

LATEST REVISION No. 2 DATE: 06-27-2023

THESE DRAWINGS REPRESENT DESIGN INTENT ONLY AND DO NOT INCLUDE VERIFICATION OF ANY STRUCTURAL, MECHANICAL, ELECTRICAL, OR LPUMBING. THE DESIGN CONCEPT REPRESENTATION INTENDS TO DEFINE THE SIZE, SHAPE, AND ARRANGEMENT OF SUAREZ CONTRACTING INC., PROJECT COMPONENTS FROM AVAILABLE INFORMATION AND SHALL BE VERIFIED AND APPROVED BY ALL RESPONSIBLE PARTIES INVOLVED IN ORDER TO CONSTRUCT IN COMLPIANCE WITH APLPICABLE CODES, REGULATIONS, ENGINEERING, CALCULATIONS, AND ENVIRONMENTAL CONDITIONS. THIS DRAWING IS PROPERTY OF SUAREZ CONTRACTING INC., AND MUST BE RETURNED UPON REQUEST. ANY USE OF INFORMATION CONTAINED HEREIN FOR USE IN FABRICATION BY ANYONE OTHER THAN SUAREZ CONTRACTING, INC MUST BE AUTHORIZED IN WRITING.

S.C.I.
SUAREZ CONTRACTING INC
CABINETS
ARCHITECTURAL MILLWORK
CUSTOM FURNITURE DESIGN
12165 MADERA WAY, RIVERSIDE, CA 92503
Tel: 951-258-3075, FAX: 951-272-1764

No.	REVISION / ISSUE	DATE	BY
1.	REVISION / ISSUE	06-05-23	AG
2.	REVISION / ISSUE	06-27-23	AG
3.			

APROVED BY

DATE:

MIGUEL'S JR
SANTA ANA
1766 EAST MC FADEN AVE.
SANTA ANA , CA 92705

DRAW BY
ALGUTVER

PROJ. MGR.
MARCO SUAREZ

SCALE:

DATE: 04-13-2023

SHEET
W-5.1

FINISH SCHEDULE	
ITEM	DESCRIPTION
LP-5	ARBORITE # W-456 EV SILVERED CROSSFIRE PEAR

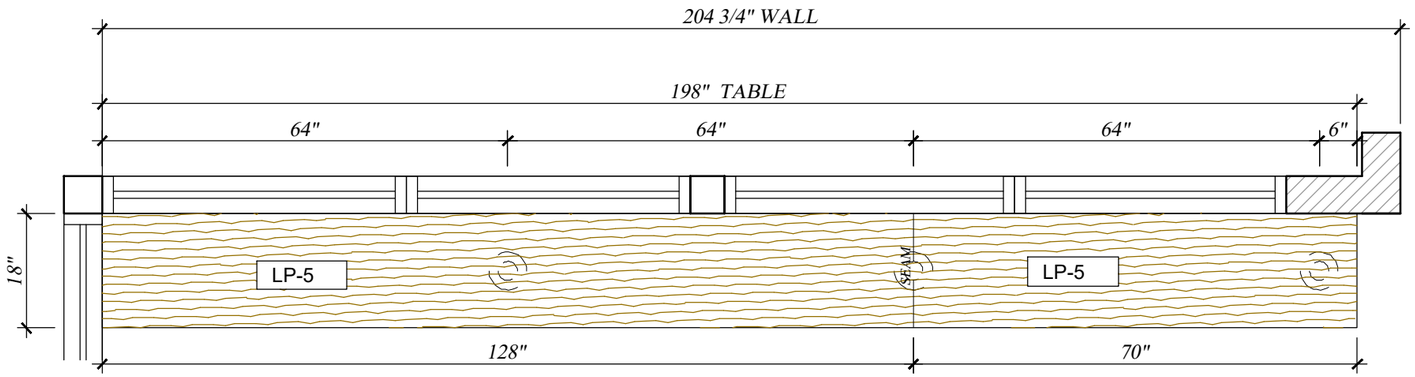

FLOOR PLAN - ITEM D-12
SCALE: 1/2" = 1'-00"

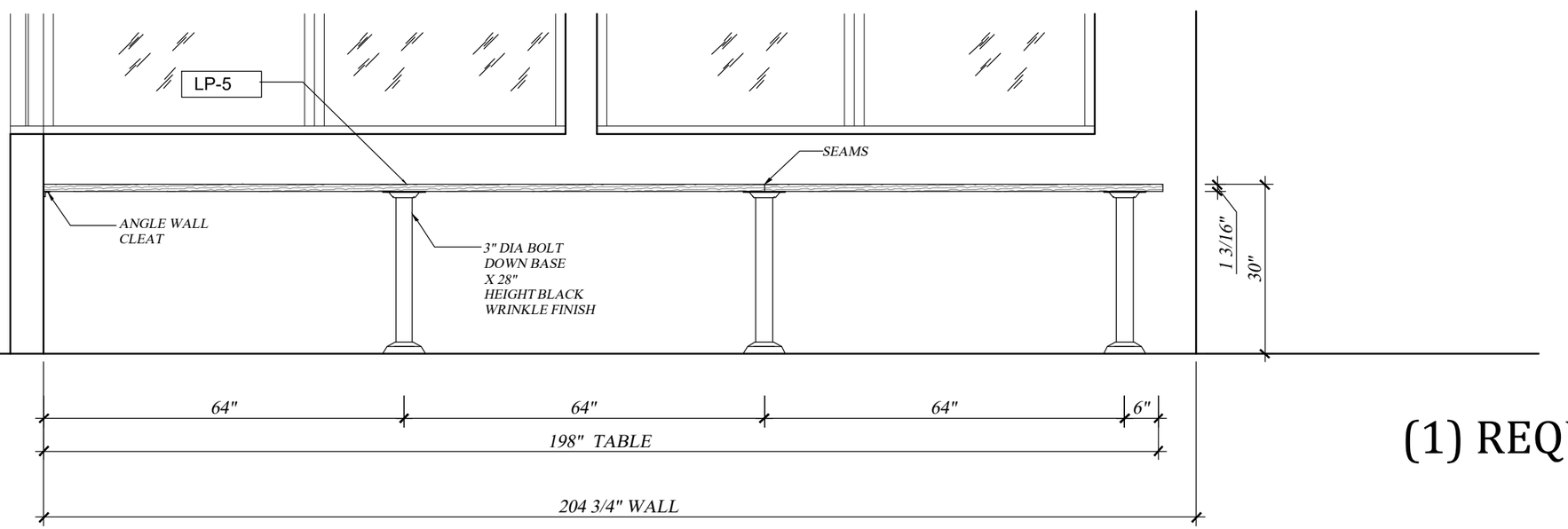

(1) REQUIRED

5 ELEVATION - ITEM D-18 & 18-A
SCALE: 1/2" = 1'-00"

ITEM D-18 DINING LEDGE TABLES

NOT FOR FABRICATION: PROJECT MANAGER: MARCO SUAREZ. _____ DATE: _____

LATEST REVISION No. 2 DATE: 06-27-2023

THESE DRAWINGS REPRESENT DESIGN INTENT ONLY AND DO NOT INCLUDE VERIFICATION OF ANY STRUCTURAL, MECHANICAL, ELECTRICAL, OR LPUMBING. THE DESIGN CONCEPT REPRESENTATION INTENDS TO DEFINE THE SIZE, SHAPE, AND ARRANGEMENT OF SUAREZ CONTRACTING INC., PROJECT COMPONENTS FROM AVAILABLE INFORMATION AND SHALL BE VERIFIED AND APPROVED BY ALL RESPONSIBLE PARTIES INVOLVED IN ORDER TO CONSTRUCT IN COMLPIANCE WITH APLPICABLE CODES, REGULATIONS, ENGINEERING, CALCULATIONS, AND ENVIRONMENTAL CONDITIONS. THIS DRAWING IS PROPERTY OF SUAREZ CONTRACTING INC., AND MUST BE RETURNED UPON REQUEST. ANY USE OF INFORMATION CONTAINED HEREIN FOR USE IN FABRICATION BY ANYONE OTHER THAN SUAREZ CONTRACTING, INC MUST BE AUTHORIZED IN WRITING.

S.C.I.
SUAREZ CONTRACTING INC
CABINETS & FIXTURES
GRANITE & SURFACES
KITCHENS & BATHROOMS
CUSTOM FURNITURE & GALLERY DESIGN
12165 MADERA WAY, RIVERSIDE, CA 92503
Tel: 951-258-3075, FAX: 951-272-1764

No.	REVISION / ISSUE	DATE	BY
1.	REVISION / ISSUE	06-05-23	AG
2.	REVISION / ISSUE	06-27-23	AG
3.			

APROVED BY

DATE:

MIGUEL'S JR
SANTA ANA
1766 EAST MC FADEN AVE.
SANTA ANA , CA 92705

DRAW BY: ALGUTVER

PROJ. MGR.: MARCO SUAREZ

SCALE:

DATE: 04-13-2023

SHEET: W-6

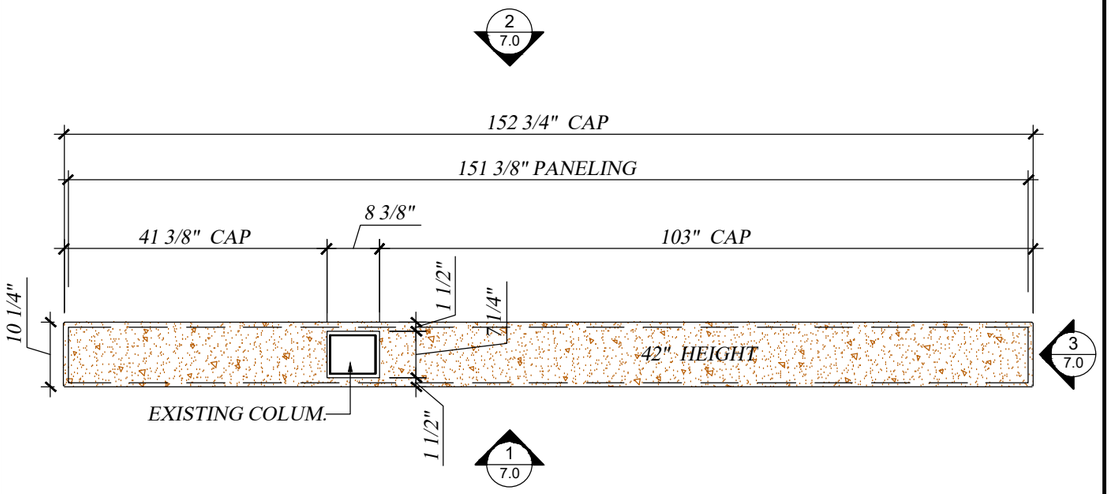

~ FLOOR PLAN (1) REQUIRED
SCALE: 1/2" = 1'-00"

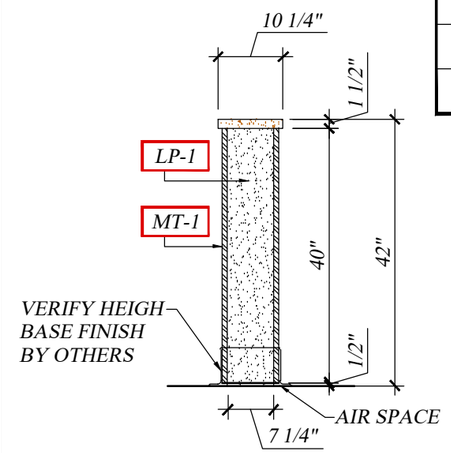

3 ELEVATION
SCALE: 1/2" = 1'-00"

FINISH SCHEDULE		
ITEM	DESCRIPTION	LOCATION
SS-1	SOLID SURFACE : AVONITE-STUDIO COLLECTION, COLOR: CLIFFSIDE F1-7931	LOW WALL CAP
LP-1	NEVAMAR: PATTERN: VA5002 COLOR: EASY ELEGANCE	LOW WALL EXTERIOR
MT-1	3/4" X 3/4" ALUMINUM "L" MOULDING	CORNER GUARD

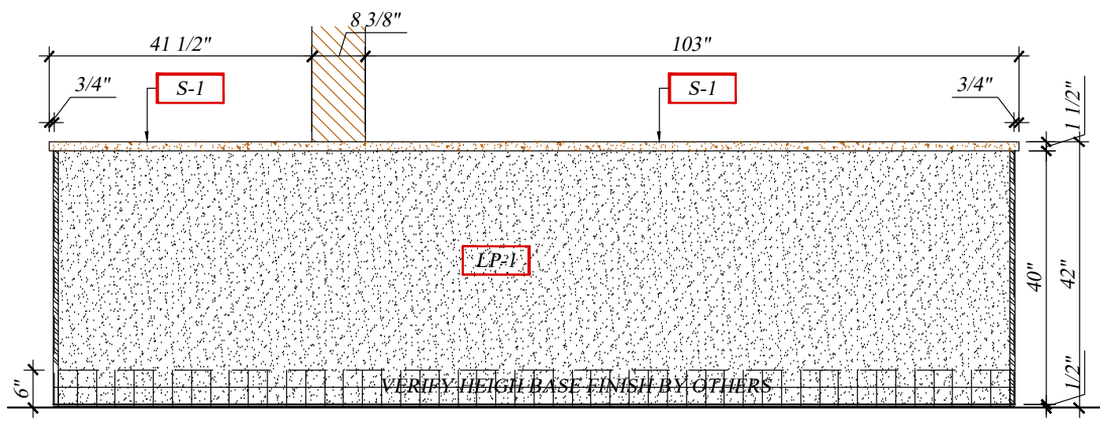

1 ELEVATION (1) REQUIRED
SCALE: 1/2" = 1'-00"

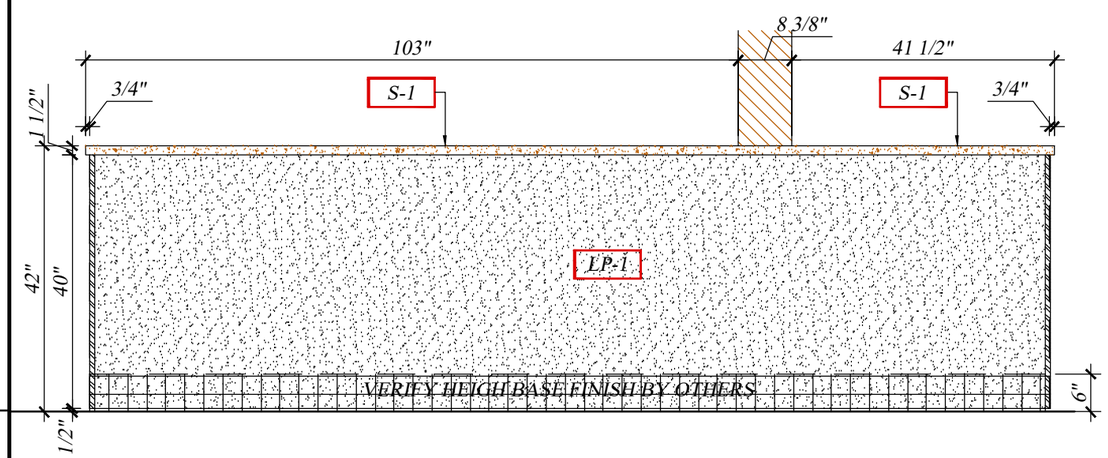

2 ELEVATION
SCALE: 1/2" = 1'-00"

ITEM D-21 LOW WALL & ITEM D-26 WALL CAP

NOT FOR FABRICATION: PROJECT MANAGER: MARCO SUAREZ. _____ DATE: _____

LATEST REVISION No. 2 DATE: 06-27-2023

THESE DRAWINGS REPRESENT DESIGN INTENT ONLY AND DO NOT INCLUDE VERIFICATION OF ANY STRUCTURAL, MECHANICAL, ELECTRICAL, OR LPUMBING. THE DESIGN CONCEPT REPRESENTATION INTENDS TO DEFINE THE SIZE, SHAPE, AND ARRANGEMENT OF SUAREZ CONTRACTING INC., PROJECT COMPONENTS FROM AVAILABLE INFORMATION AND SHALL BE VERIFIED AND APPROVED BY ALL RESPONSIBLE PARTIES INVOLVED IN ORDER TO CONSTRUCT IN COMLPIANCE WITH APLPICABLE CODES, REGULATIONS, ENGINEERING, CALCULATIONS, AND ENVIRONMENTAL CONDITIONS. THIS DRAWING IS PROPERTY OF SUAREZ CONTRACTING INC., AND MUST BE RETURNED UPON REQUEST. ANY USE OF INFORMATION CONTAINED HEREIN FOR USE IN FABRICATION BY ANYONE OTHER THAN SUAREZ CONTRACTING, INC MUST BE AUTHORIZED IN WRITING.

S.C.I.
SUAREZ CONTRACTING INC
CABINETS & FURNITURE
LICENSE
CSLB 1000000
AVONITE
CUSTOM CABINETRY DESIGN
12165 MADERA WAY, RIVERSIDE, CA 92503
Tel: 951-258-3075, FAX: 951-272-1764

No.	REVISION / ISSUE	DATE	BY
1.	REVISION / ISSUE	06-05-23	AG
2.	REVISION / ISSUE	06-27-23	AG
3.			

APROVED BY

DATE:

MIGUEL'S JR
SANTA ANA
1766 EAST MC FADEN AVE.
SANTA ANA , CA 92705

DRAW BY
ALGUTVER

PROJ. MGR.
MARCO SUAREZ

SCALE:

DATE: 04-13-2023

SHEET
W-7

FINISH SCHEDULE		
ITEM	DESCRIPTION	LOCATION
SS-1	SOLID SURFACE : AVONITE-STUDIO COLLECTION, COLOR: CLIFFSIDE F1-7931	LOW WALL CAP
LP-1	NEVAMAR: PATTERN: VA5002 COLOR: EASY ELEGANCE	LOW WALL EXTERIOR
MT-1	3/4" X 3/4" ALUMINUM "L" MOULDING	CORNER GUARD

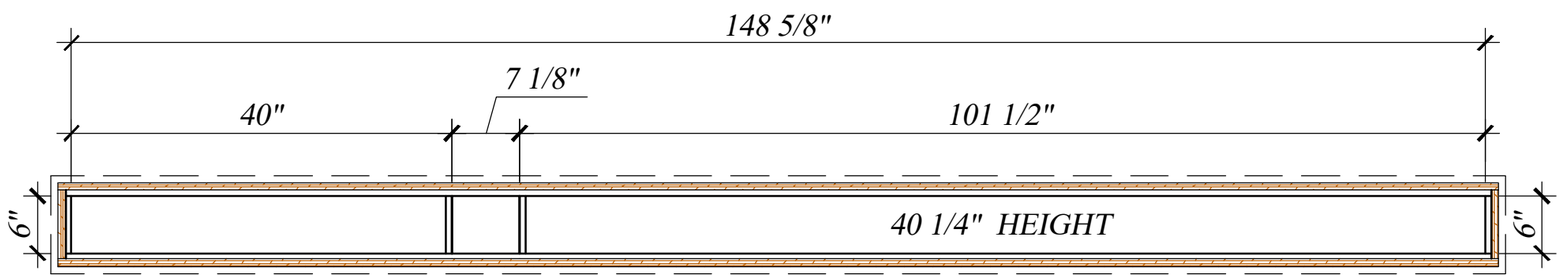

~ PLAN SECTION
SCALE: 3/4" = 1'-00"

(1) REQUIRED

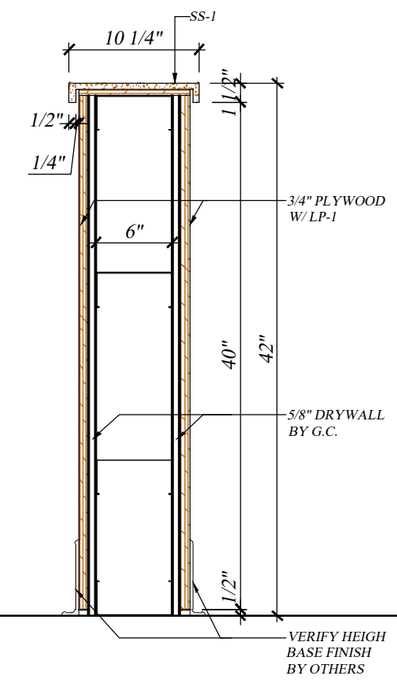

A SECTION
SCALE: 1" = 1'-00"

ITEM D-21 LOW WALL & ITEM D-26 WALL CAP

NOT FOR FABRICATION: PROJECT MANAGER: MARCO SUAREZ. _____ DATE: _____

LATEST REVISION No. 2 DATE: 06-27-2023

THESE DRAWINGS REPRESENT DESIGN INTENT ONLY AND DO NOT INCLUDE VERIFICATION OF ANY STRUCTURAL, MECHANICAL, ELECTRICAL, OR LPUMBING. THE DESIGN CONCEPT REPRESENTATION INTENDS TO DEFINE THE SIZE, SHAPE, AND ARRANGEMENT OF SUAREZ CONTRACTING INC., PROJECT COMPONENTS FROM AVAILABLE INFORMATION AND SHALL BE VERIFIED AND APPROVED BY ALL RESPONSIBLE PARTIES INVOLVED IN ORDER TO CONSTRUCT IN COMLPIANCE WITH APLPICABLE CODES, REGULATIONS, ENGINEERING, CALCULATIONS, AND ENVIRONMENTAL CONDITIONS. THIS DRAWING IS PROPERTY OF SUAREZ CONTRACTING INC., AND MUST BE RETURNED UPON REQUEST. ANY USE OF INFORMATION CONTAINED HEREIN FOR USE IN FABRICATION BY ANYONE OTHER THAN SUAREZ CONTRACTING, INC MUST BE AUTHORIZED IN WRITING.

S.C.I.
SUAREZ CONTRACTING INC
CABINETS
COUNTERTOPS
CUSTOM FURNITURE
ARCHITECTURAL MILLWORK
12165 MADERA WAY, RIVERSIDE, CA 92503
Tel: 951-258-3075, FAX: 951-272-1764

No.	REVISION / ISSUE	DATE	BY
1.	REVISION / ISSUE	06-05-23	AG
2.	REVISION / ISSUE	06-27-23	AG
3.			

APROVED BY

DATE:

MIGUEL'S JR
SANTA ANA
1766 EAST MC FADEN AVE.
SANTA ANA , CA 92705

DRAW BY
ALGUTVER

PROJ. MGR.
MARCO SUAREZ

SCALE:

DATE: 04-13-2023

SHEET
W-7.1

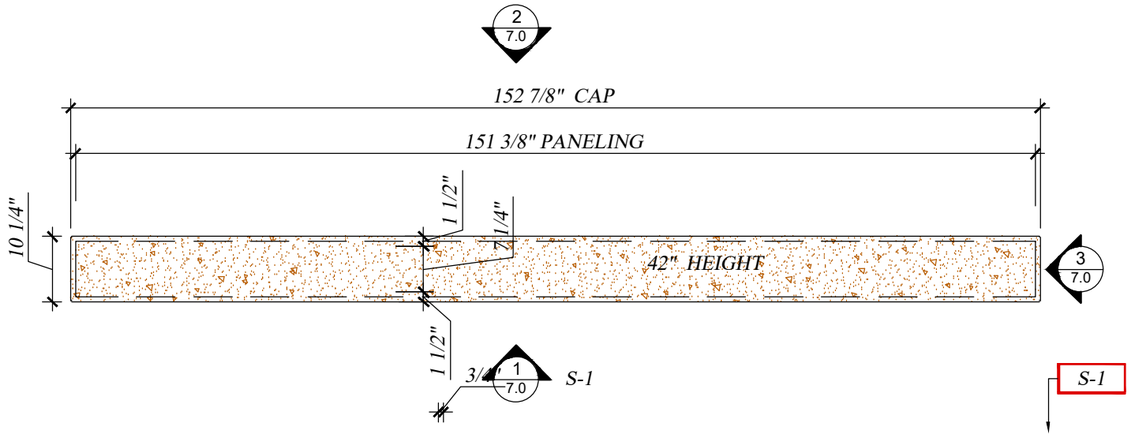

~ FLOOR PLAN - ITEM D-12 (1) REQUIRED

SCALE: 1/2" = 1'-00"

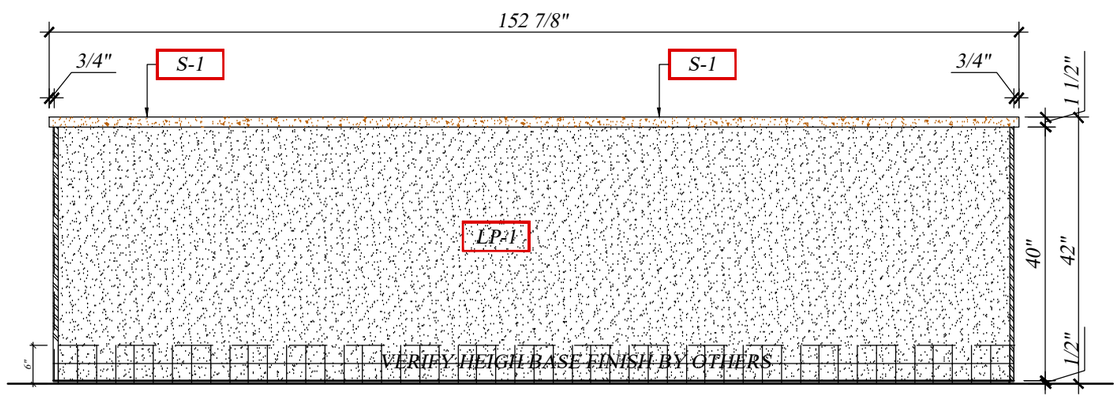

2 ELEVATION (1) REQUIRED

SCALE: 1/2" = 1'-00"

ITEM D-21A LOW WALL & ITEM D-26 WALL CAP

FINISH SCHEDULE		
ITEM	DESCRIPTION	LOCATION
SS-1	SOLID SURFACE : AVONITE-STUDIO COLLECTION, COLOR: CLIFFSIDE F1-7931	LOW WALL CAP
LP-1	NEVAMAR: PATTERN: VA5002 COLOR: EASY ELEGANCE	LOW WALL EXTERIOR
MT-1	3/4" X 3/4" ALUMINUM "L" MOULDING	CORNER GUARD

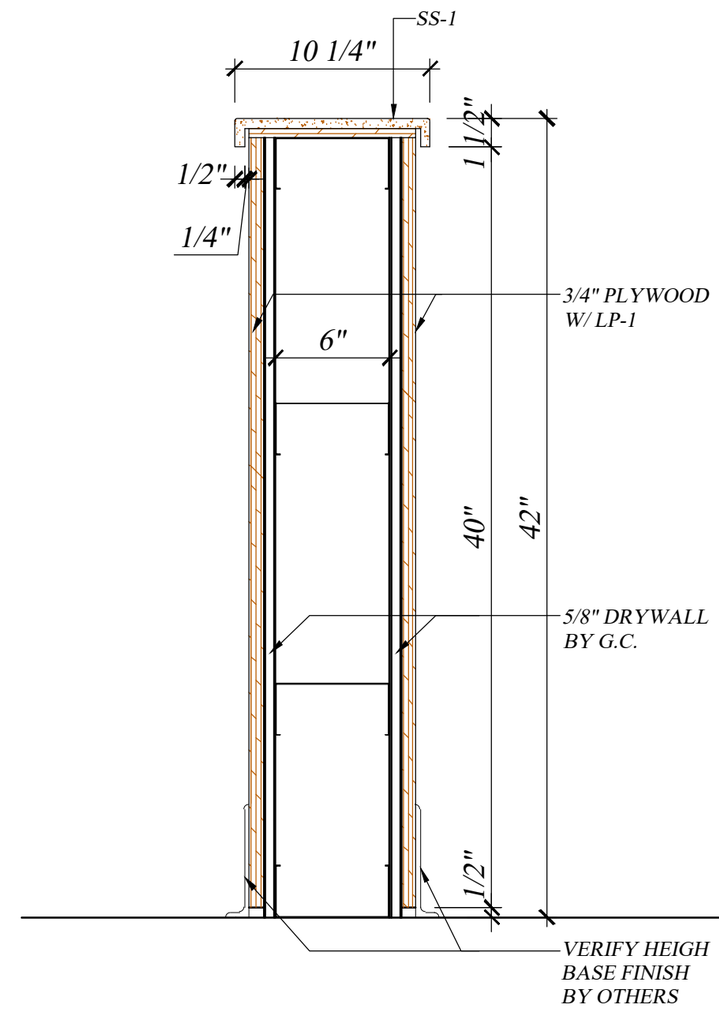

B SECTION

SCALE: 1-1/2" = 1'-00"

NOT FOR FABRICATION: PROJECT MANAGER: MARCO SUAREZ. _____ DATE: _____

LATEST REVISION No. 2 DATE: 06-27-2023

THESE DRAWINGS REPRESENT DESIGN INTENT ONLY AND DO NOT INCLUDE VERIFICATION OF ANY STRUCTURAL, MECHANICAL, ELECTRICAL, OR LPUMBING. THE DESIGN CONCEPT REPRESENTATION INTENDS TO DEFINE THE SIZE, SHAPE, AND ARRANGEMENT OF SUAREZ CONTRACTING INC., PROJECT COMPONENTS FROM AVAILABLE INFORMATION AND SHALL BE VERIFIED AND APPROVED BY ALL RESPONSIBLE PARTIES INVOLVED IN ORDER TO CONSTRUCT IN COMLPIANCE WITH APLPICABLE CODES, REGULATIONS, ENGINEERING, CALCULATIONS, AND ENVIRONMENTAL CONDITIONS. THIS DRAWING IS PROPERTY OF SUAREZ CONTRACTING INC., AND MUST BE RETURNED UPON REQUEST. ANY USE OF INFORMATION CONTAINED HEREIN FOR USE IN FABRICATION BY ANYONE OTHER THAN SUAREZ CONTRACTING, INC MUST BE AUTHORIZED IN WRITING.

S.C.I. SUAREZ CONTRACTING INC
CABINETS
CUSTOM FURNITURE
ARCHITECTURAL MILLWORK & STORE FIXTURES
12165 MADERA WAY, RIVERSIDE, CA 92503
Tel: 951-258-3075, FAX: 951-272-1764

No.	REVISION / ISSUE	DATE	BY
1.	REVISION / ISSUE	06-05-23	AG
2.	REVISION / ISSUE	06-27-23	AG
3.			

APROVED BY

DATE:

MIGUEL'S JR
SANTA ANA
1766 EAST MC FADEN AVE.
SANTA ANA , CA 92705

DRAW BY ALGUTVER

PROJ. MGR. MARCO SUAREZ

SCALE:

DATE: 04-13-2023

SHEET W-7.2

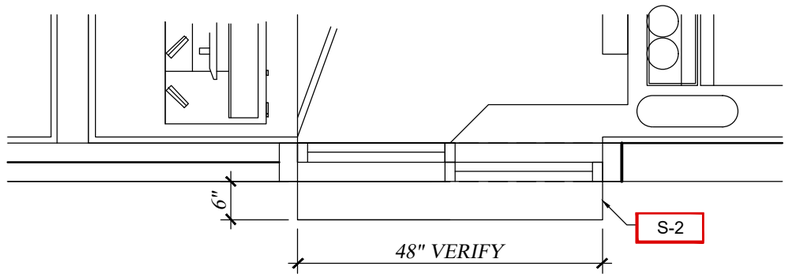

~ FLOOR PLAN
SCALE: 1/2" = 1'-00"

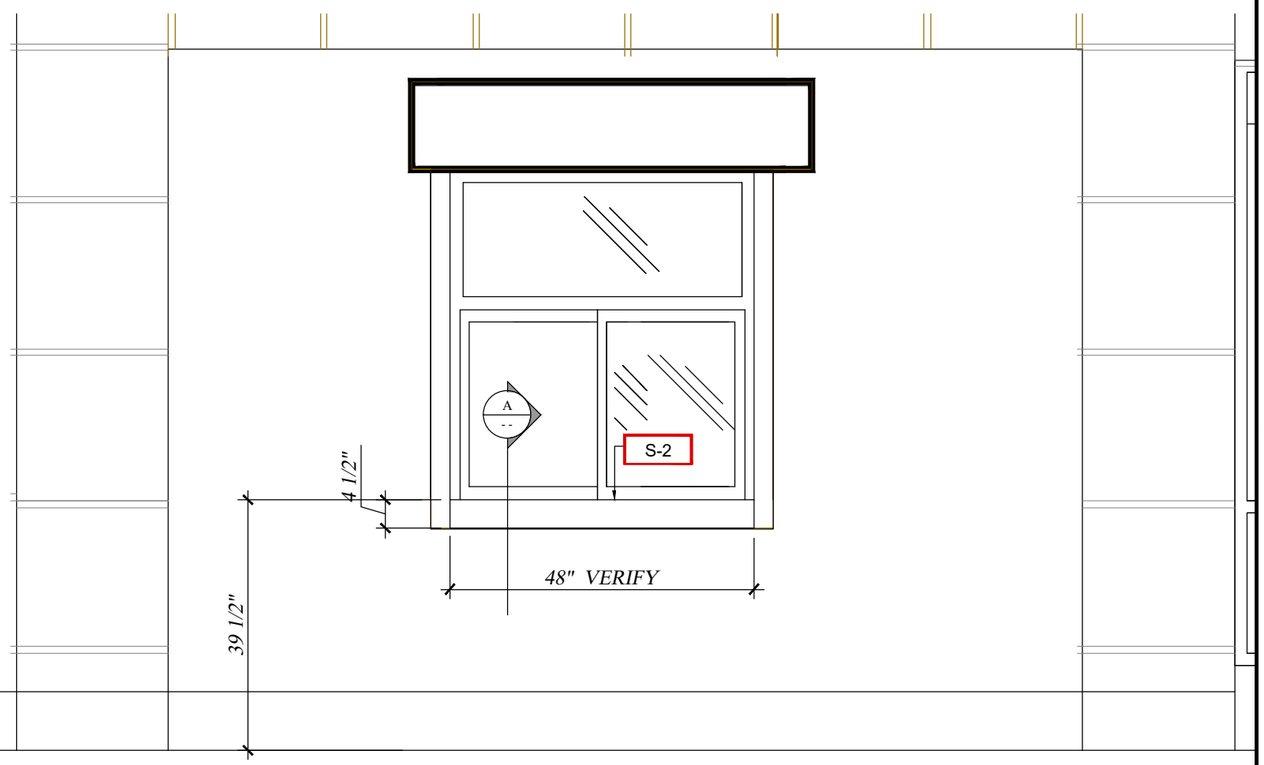

1 ELEVATION
SCALE: 1/2" = 1'-00"

FINISH SCHEDULE		
ITEM	DESCRIPTION	LOCATION
S-2	PRODUCT: SOLID SURFACE STARON COLOR: EARTHEN STRATUM #QL287	DRIVE THRU WINDOW SILL

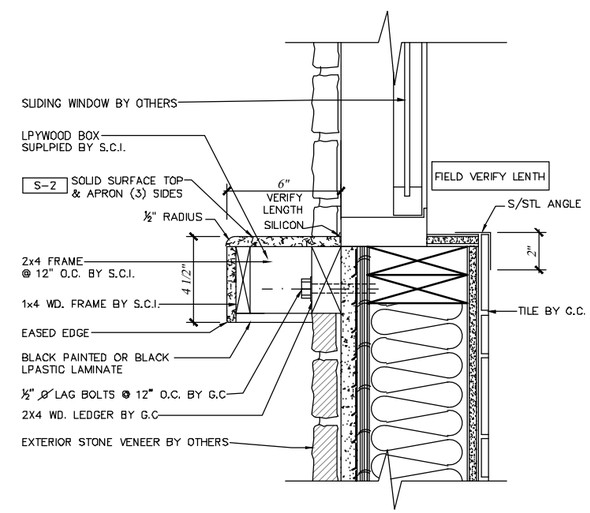

A SECTION
SCALE:1- 1/2" = 1'-00"

ITEM D-22 DRIVE THRU WINDOW SILL

NOT FOR FABRICATION: PROJECT MANAGER: MARCO SUAREZ. _____ DATE: _____

LATEST REVISION No. 2 DATE: 06-27-2023

THESE DRAWINGS REPRESENT DESIGN INTENT ONLY AND DO NOT INCLUDE VERIFICATION OF ANY STRUCTURAL, MECHANICAL, ELECTRICAL, OR LPUMBING. THE DESIGN CONCEPT REPRESENTATION INTENDS TO DEFINE THE SIZE, SHAPE, AND ARRANGEMENT OF SUAREZ CONTRACTING INC., PROJECT COMPONENTS FROM AVAILABLE INFORMATION AND SHALL BE VERIFIED AND APPROVED BY ALL RESPONSIBLE PARTIES INVOLVED IN ORDER TO CONSTRUCT IN COMLPIANCE WITH APLPICABLE CODES, REGULATIONS, ENGINEERING, CALCULATIONS, AND ENVIRONMENTAL CONDITIONS. THIS DRAWING IS PROPERTY OF SUAREZ CONTRACTING INC., AND MUST BE RETURNED UPON REQUEST. ANY USE OF INFORMATION CONTAINED HEREIN FOR USE IN FABRICATION BY ANYONE OTHER THAN SUAREZ CONTRACTING, INC MUST BE AUTHORIZED IN WRITING.

S.C.I.
SUAREZ CONTRACTING INC
CABINETS
CUSTOM FURNITURE & FIXTURES
ARCHITECTURAL MILLWORK & INTERIOR DESIGN
12165 MADERA WAY, RIVERSIDE, CA 92503
Tel: 951-258-3075, FAX: 951-272-1764

No.	REVISION / ISSUE	DATE	BY
1.	REVISION / ISSUE	06-05-23	AG
2.	REVISION / ISSUE	06-27-23	AG
3.			

APROVED BY

DATE:

MIGUEL'S JR
SANTA ANA
1766 EAST MC FADEN AVE.
SANTA ANA , CA 92705

DRAW BY: ALGUTVER

PROJ. MGR.: MARCO SUAREZ

SCALE:

DATE: 04-13-2023

SHEET W-8.0

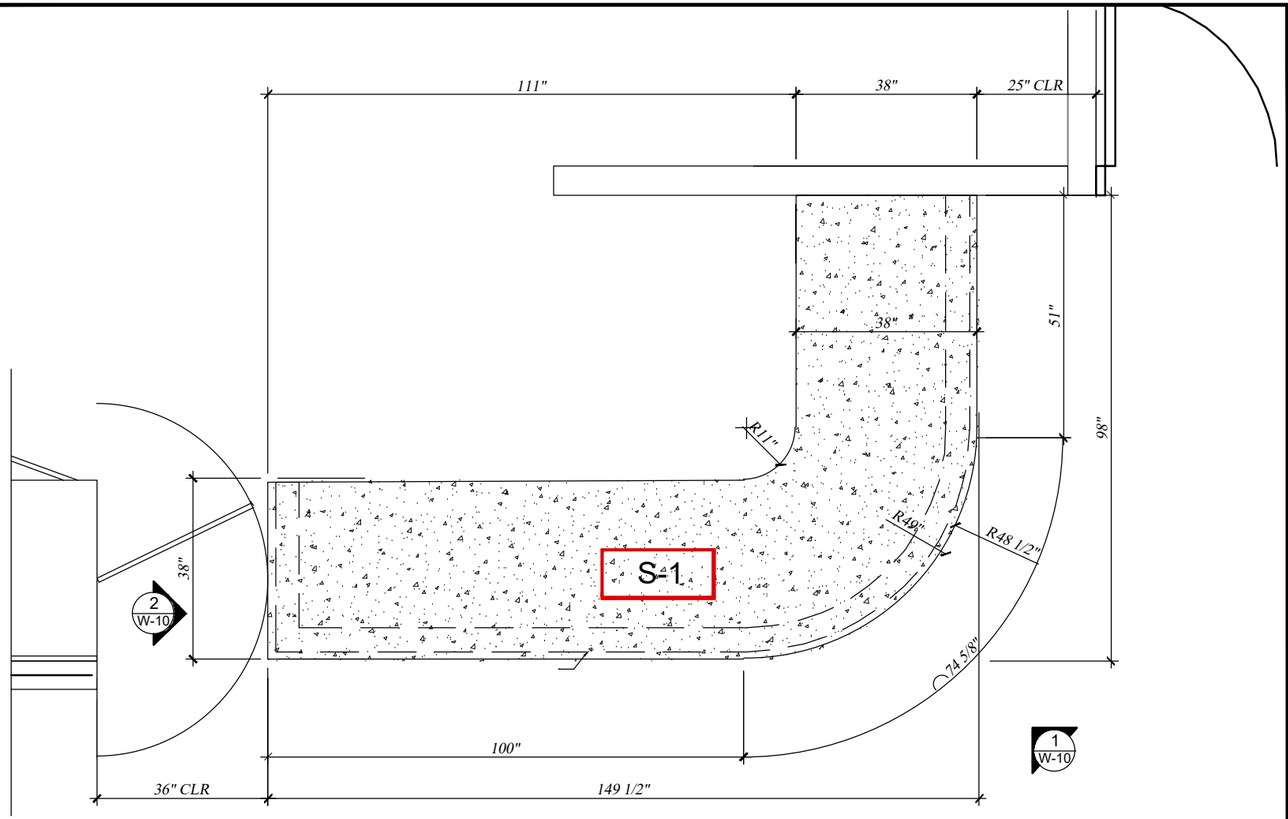

~ FLOOR PLAN
SCALE: 3/8" = 1'-00"

FINISH SCHEDULE

ITEM	DESCRIPTION	LOCATION
S-1	SOLID SURFACE : AVONITE-STUDIO COLLECTION, COLOR: CLIFFSIDE F1-7931	TOP & SPLASH
LP-4	ARBORITE: W-454 "EV NATURAL CROSSFIRE PEAR	PANELS
LP-5	ARBORITE: W-456 "EV SILVERED CROSS FIRE PEAR	PANELS

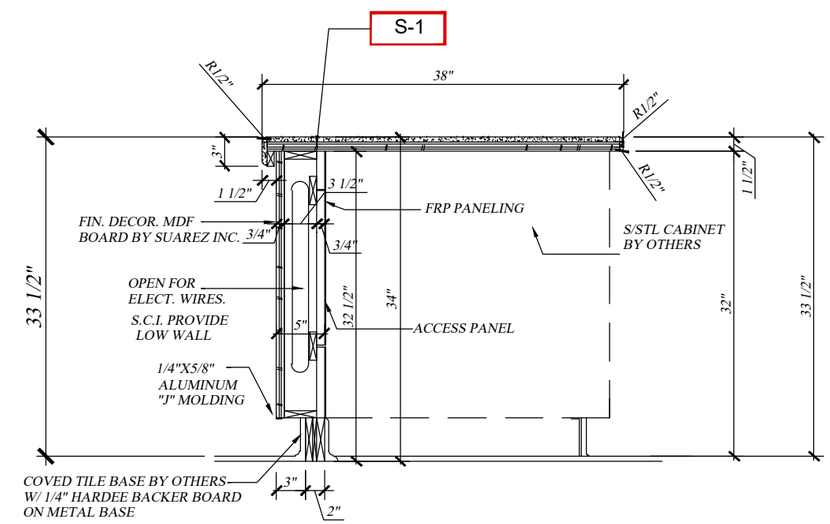

A SECTION
SCALE: 3/4" = 1'-00"

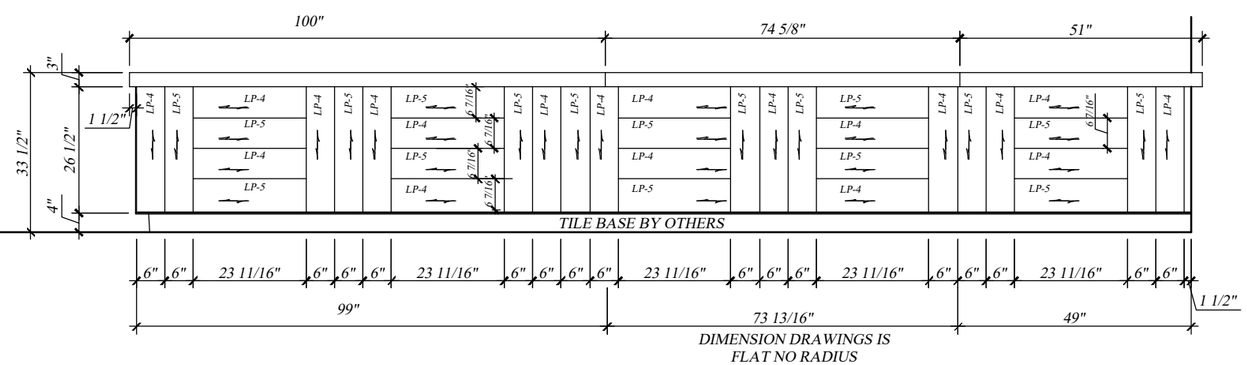

1 ELEVATION
SCALE: 3/8" = 1'-00"

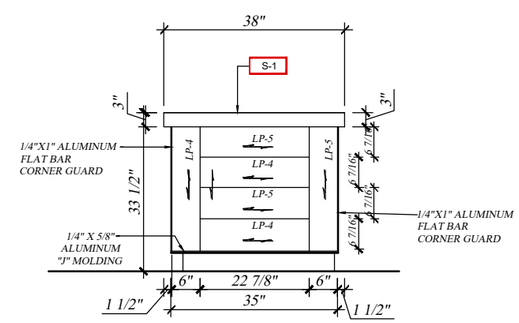

2 ELEVATION
SCALE: 3/8" = 1'-00"

ITEM D-23 WAINSCOT REWORK

NOT FOR FABRICATION: PROJECT MANAGER: MARCO SUAREZ. _____ DATE: _____

LATEST REVISION No. 2 DATE: 06-27-2023

THESE DRAWINGS REPRESENT DESIGN INTENT ONLY AND DO NOT INCLUDE VERIFICATION OF ANY STRUCTURAL, MECHANICAL, ELECTRICAL, OR LPUMBING. THE DESIGN CONCEPT REPRESENTATION INTENDS TO DEFINE THE SIZE, SHAPE, AND ARRANGEMENT OF SUAREZ CONTRACTING INC., PROJECT COMPONENTS FROM AVAILABLE INFORMATION AND SHALL BE VERIFIED AND APPROVED BY ALL RESPONSIBLE PARTIES INVOLVED IN ORDER TO CONSTRUCT IN COMLPIANCE WITH APLPICABLE CODES, REGULATIONS, ENGINEERING, CALCULATIONS, AND ENVIRONMENTAL CONDITIONS. THIS DRAWING IS PROPERTY OF SUAREZ CONTRACTING INC., AND MUST BE RETURNED UPON REQUEST. ANY USE OF INFORMATION CONTAINED HEREIN FOR USE IN FABRICATION BY ANYONE OTHER THAN SUAREZ CONTRACTING, INC MUST BE AUTHORIZED IN WRITING.

S.C.I.
SUAREZ CONTRACTING INC
CABINETS
CUSTOM CABINETS
ARCHITECTURAL MILLWORK
CUSTOM FURNITURE
GARDEN
GARDEN STYLE FURNITURE
GARDEN DESIGN
12165 MADERA WAY, RIVERSIDE, CA 92503
Tel: 951-258-3075, FAX: 951-272-1764

No.	REVISION / ISSUE	DATE	BY
1.	REVISION / ISSUE	06-05-23	AG
2.	REVISION / ISSUE	06-27-23	AG
3.			

APROVED BY

DATE:

MIGUEL'S JR
SANTA ANA
1766 EAST MC FADEN AVE.
SANTA ANA , CA 92705

DRAW BY
ALGUTVER

PROJ. MGR.
MARCO SUAREZ

SCALE:

DATE: 04-13-2023

SHEET
W-9.0

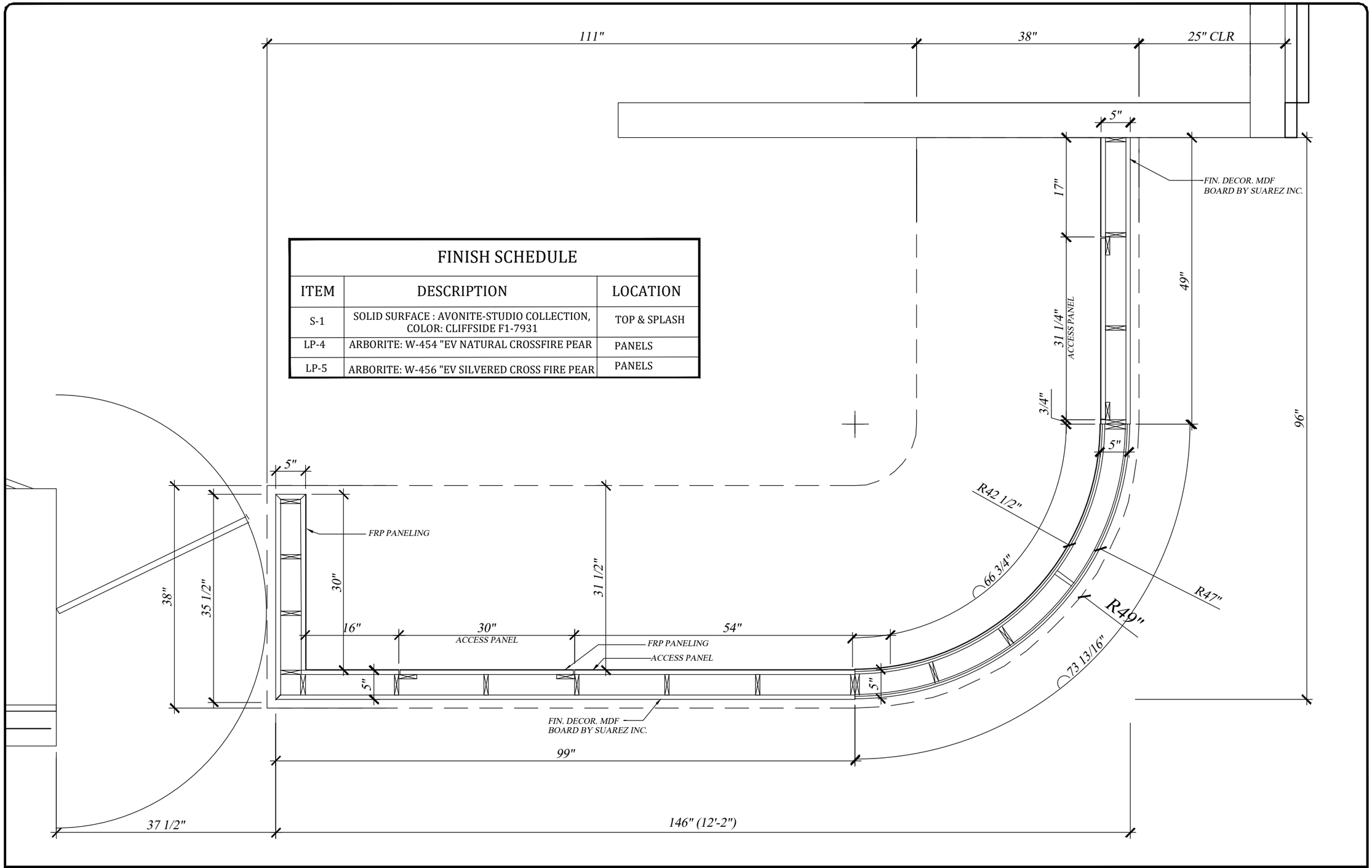

FINISH SCHEDULE

ITEM	DESCRIPTION	LOCATION
S-1	SOLID SURFACE : AVONITE-STUDIO COLLECTION, COLOR: CLIFFSIDE F1-7931	TOP & SPLASH
LP-4	ARBORITE: W-454 "EV NATURAL CROSSFIRE PEAR	PANELS
LP-5	ARBORITE: W-456 "EV SILVERED CROSS FIRE PEAR	PANELS

~ PLAN SECTION
SCALE: 3/4" = 1'-00"

ITEM D-23 WAINSCOT REWORK

NOT FOR FABRICATION: PROJECT MANAGER: MARCO SUAREZ. _____ DATE: _____

LATEST REVISION No. 2 DATE: 06-27-2023

THESE DRAWINGS REPRESENT DESIGN INTENT ONLY AND DO NOT INCLUDE VERIFICATION OF ANY STRUCTURAL, MECHANICAL, ELECTRICAL, OR LPUMBING. THE DESIGN CONCEPT REPRESENTATION INTENDS TO DEFINE THE SIZE, SHAPE, AND ARRANGEMENT OF SUAREZ CONTRACTING INC., PROJECT COMPONENTS FROM AVAILABLE INFORMATION AND SHALL BE VERIFIED AND APPROVED BY ALL RESPONSIBLE PARTIES INVOLVED IN ORDER TO CONSTRUCT IN COMLPIANCE WITH APLPICABLE CODES, REGULATIONS, ENGINEERING, CALCULATIONS, AND ENVIRONMENTAL CONDITIONS. THIS DRAWING IS PROPERTY OF SUAREZ CONTRACTING INC., AND MUST BE RETURNED UPON REQUEST. ANY USE OF INFORMATION CONTAINED HEREIN FOR USE IN FABRICATION BY ANYONE OTHER THAN SUAREZ CONTRACTING, INC MUST BE AUTHORIZED IN WRITING.

S.C.I.
SUAREZ CONTRACTING INC
CABINETS & FURNITURE
LICENSE
1000000
12165 MADERA WAY, RIVERSIDE, CA 92503
Tel: 951-258-3075, FAX: 951-272-1764

No.	REVISION / ISSUE	DATE	BY
1.	REVISION / ISSUE	06-05-23	AG
2.	REVISION / ISSUE	06-27-23	AG
3.			

APROVED BY

DATE:

MIGUEL'S JR
SANTA ANA
1766 EAST MC FADEN AVE.
SANTA ANA , CA 92705

DRAW BY
ALGUTVER

PROJ. MGR.
MARCO SUAREZ

SCALE:

DATE: 04-13-2023

SHEET
W-9.1

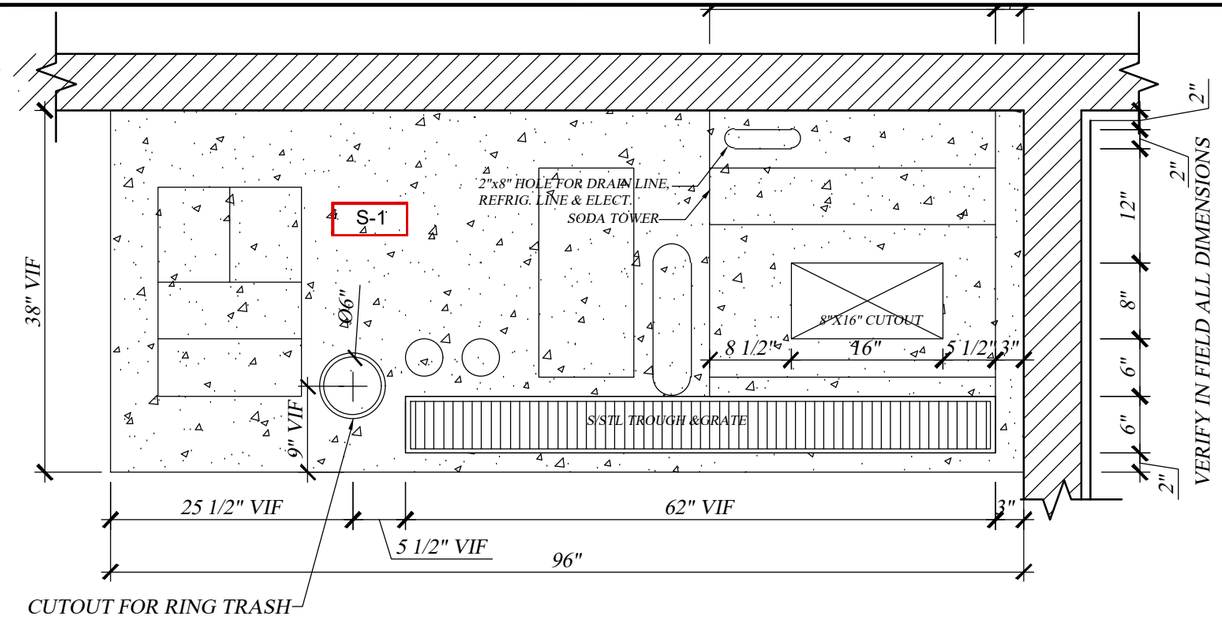

FLOOR PLAN
SCALE: 3/4" = 1'-00"

FINISH SCHEDULE		
ITEM	DESCRIPTION	LOCATION
S-1	SOLID SURFACE : AVONITE-STUDIO COLLECTION, COLOR: CLIFFSIDE F1-7931	COUNTER TOP
LP-1	NEVAMAR: EASY ELEGANCE # VA5002	PANELS DOORS

ARCH.
PLEASE LOCATE EQUIPMENT ON CABINET TOP TO CUTOUT SPACE

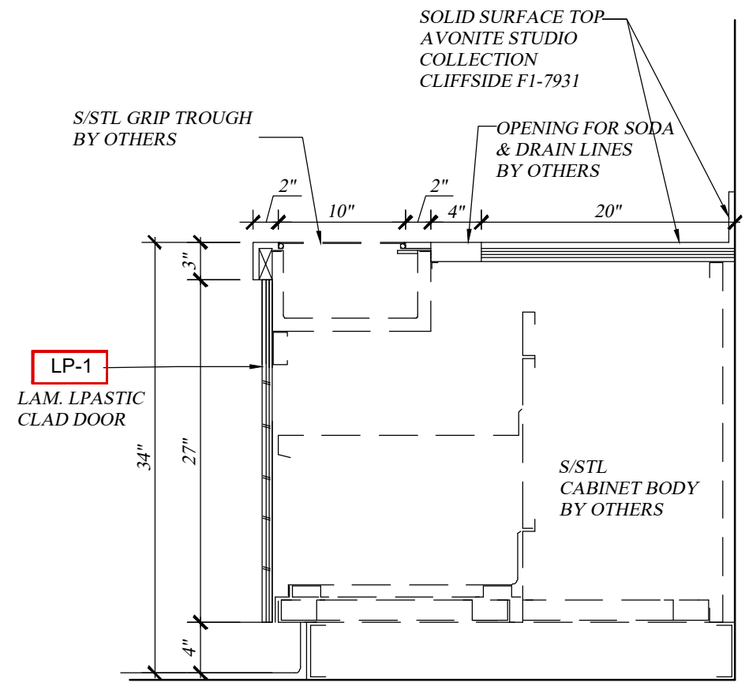

A SECTION
SCALE: 3/4" = 1'-00"

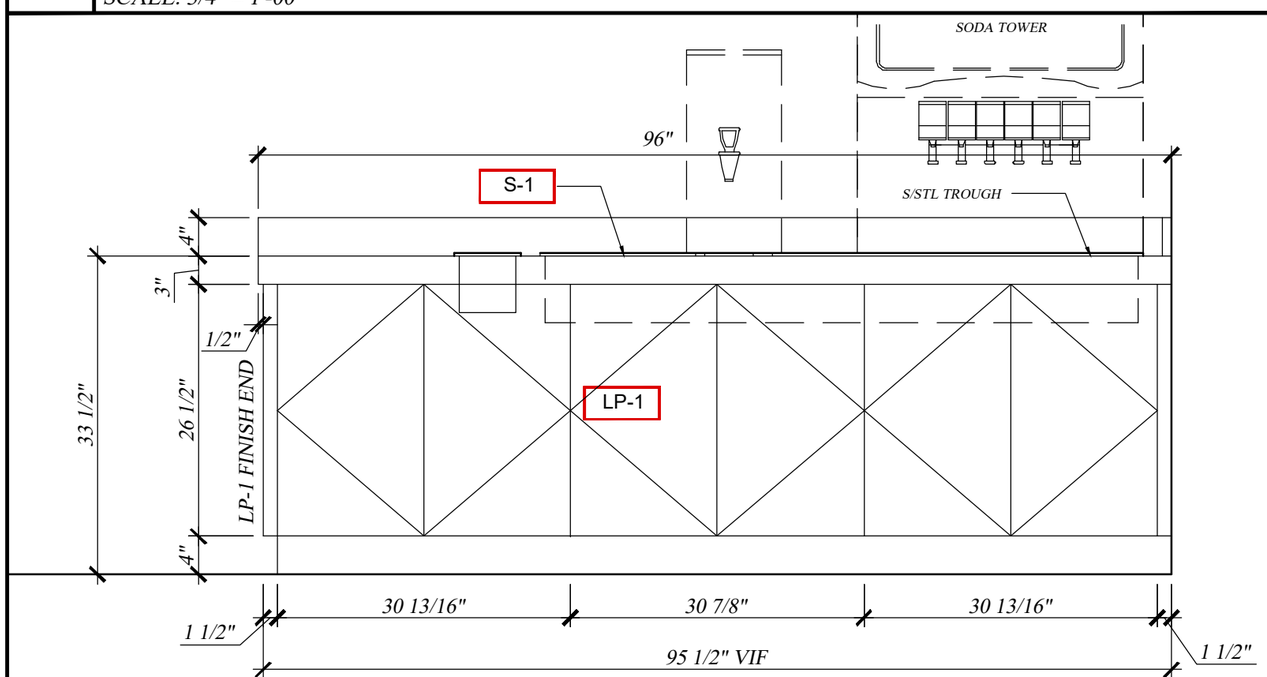

1 ELEVATION
SCALE: 3/8" = 1'-00"

ITEM D-27 & 28 BEVERAGE COUNTER

NOT FOR FABRICATION: PROJECT MANAGER: MARCO SUAREZ. _____ DATE: _____

LATEST REVISION No. 2 DATE: 06-27-2023

THESE DRAWINGS REPRESENT DESIGN INTENT ONLY AND DO NOT INCLUDE VERIFICATION OF ANY STRUCTURAL, MECHANICAL, ELECTRICAL, OR LPUMBING. THE DESIGN CONCEPT REPRESENTATION INTENDS TO DEFINE THE SIZE, SHAPE, AND ARRANGEMENT OF SUAREZ CONTRACTING INC., PROJECT COMPONENTS FROM AVAILABLE INFORMATION AND SHALL BE VERIFIED AND APPROVED BY ALL RESPONSIBLE PARTIES INVOLVED IN ORDER TO CONSTRUCT IN COMLPIANCE WITH APLPICABLE CODES, REGULATIONS, ENGINEERING, CALCULATIONS, AND ENVIRONMENTAL CONDITIONS. THIS DRAWING IS PROPERTY OF SUAREZ CONTRACTING INC., AND MUST BE RETURNED UPON REQUEST. ANY USE OF INFORMATION CONTAINED HEREIN FOR USE IN FABRICATION BY ANYONE OTHER THAN SUAREZ CONTRACTING, INC MUST BE AUTHORIZED IN WRITING.

S.C.I.
SUAREZ CONTRACTING INC
CABINETS & FURNITURE
LICENSE
AVONITE
CUSTOM CABINETRY DESIGN
12165 MADERA WAY, RIVERSIDE, CA 92503
Tel: 951-258-3075, FAX: 951-272-1764

No.	REVISION / ISSUE	DATE	BY
1.	REVISION / ISSUE	06-05-23	AG
2.	REVISION / ISSUE	06-27-23	AG
3.			

APROVED BY

DATE:

MIGUEL'S JR
SANTA ANA
1766 EAST MC FADEN AVE.
SANTA ANA , CA 92705

DRAW BY: ALGUTVER
PROJ. MGR.: MARCO SUAREZ
SCALE:
DATE: 04-13-2023
SHEET: W-10.0

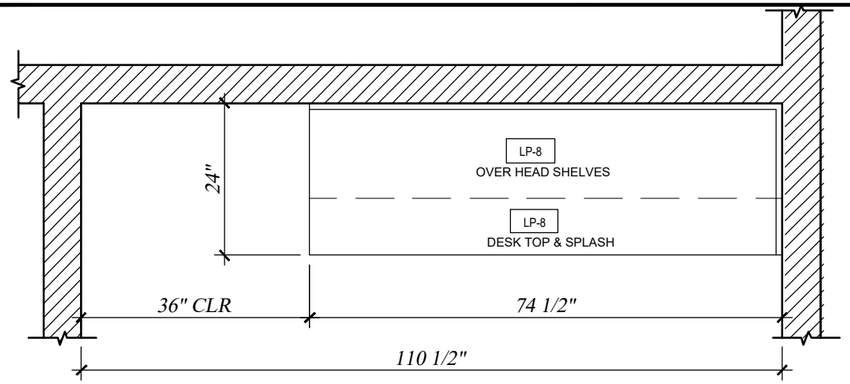

FLOOR PLAN
SCALE: 1/2" = 1'-00"

FINISH SCHEDULE		
ITEM	DESCRIPTION	LOCATION
LP-7	FORMICA: 464 GRAY STONE	EXTERIOR FACE & DOORS
LP-8	NEVAMAR # MR6002 CHARCOAL MATRIX	TOP & SLPASH & OVERHEAD SHELVES

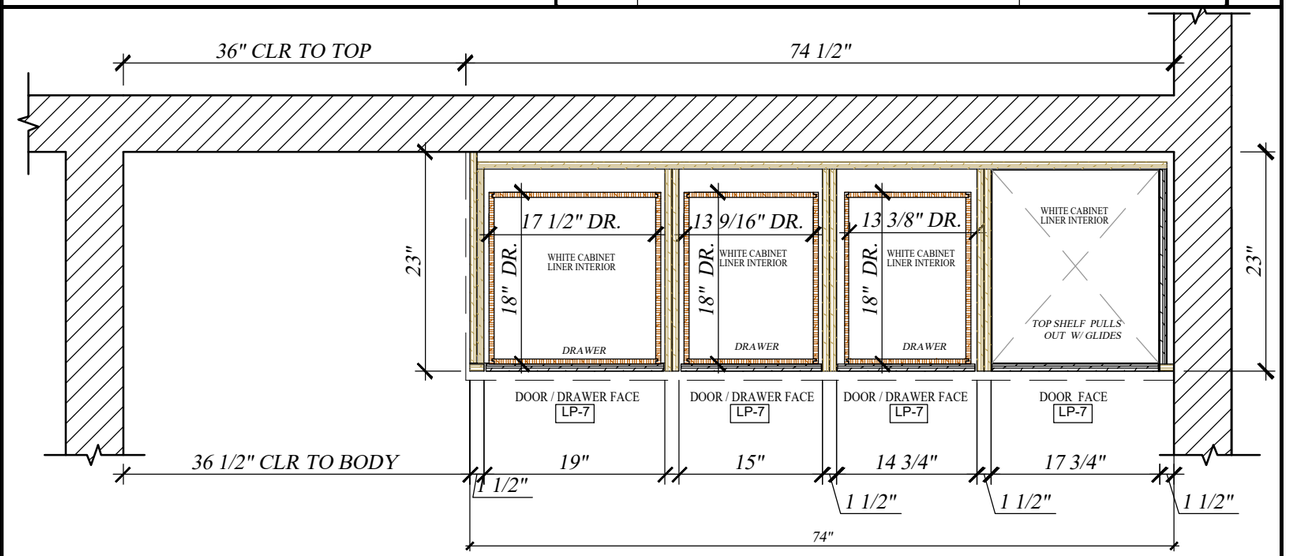

SECTION PLAN
SCALE: 3/4" = 1'-00"

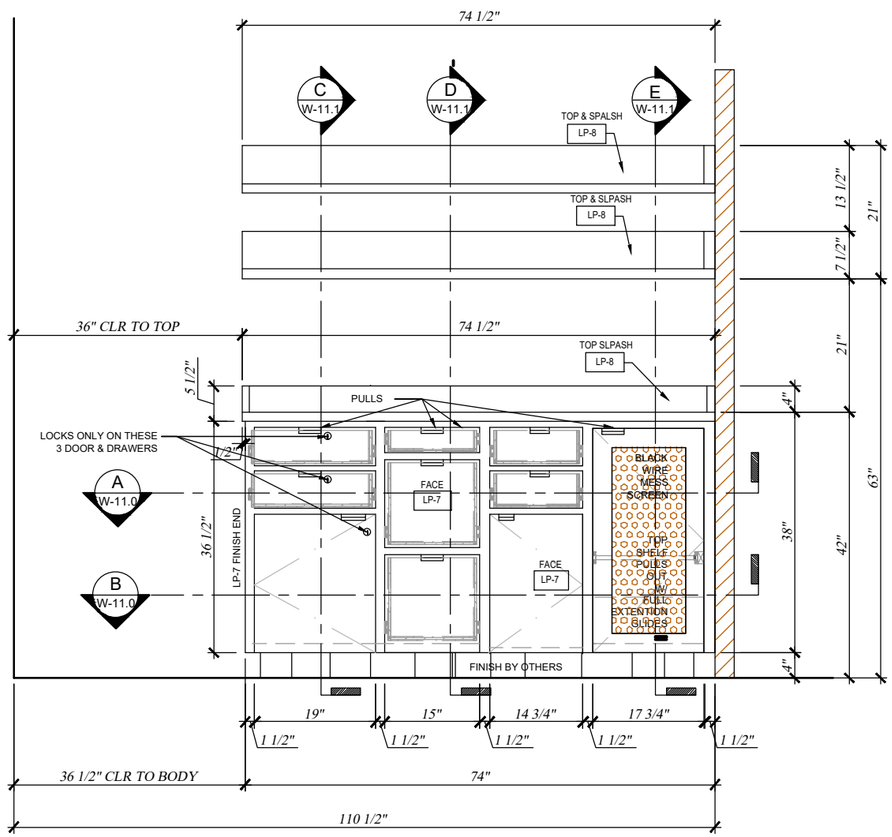

1 ELEVATION
SCALE: 1/2" = 1'-00"

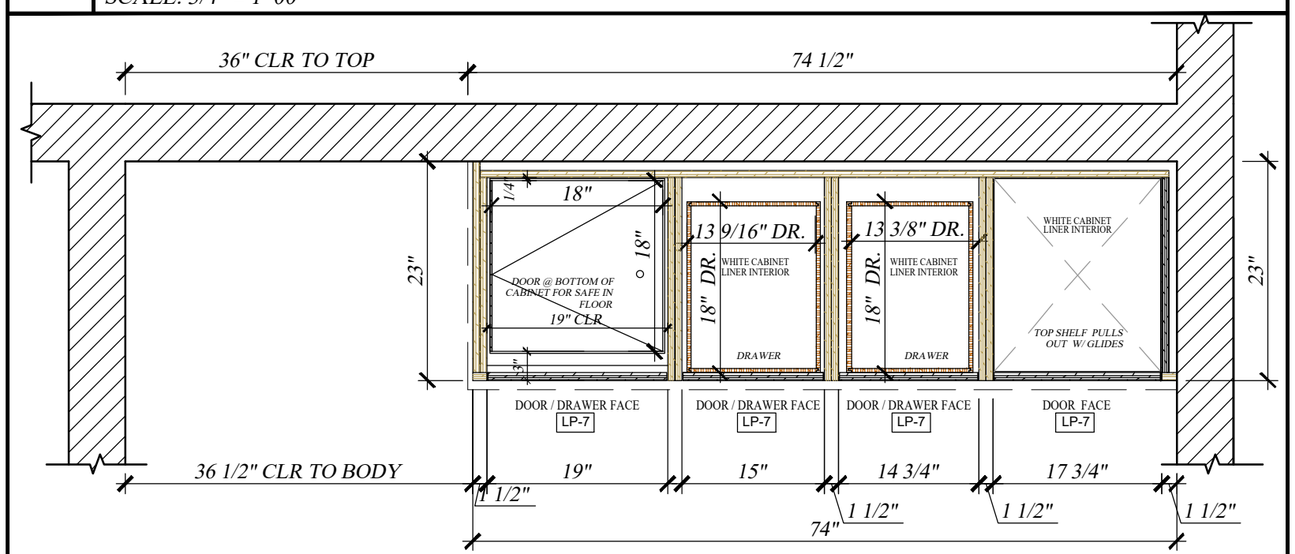

SECTION PLAN
SCALE: 3/4" = 1'-00"

ITEM D-29 OFFICE DESK

NOT FOR FABRICATION: PROJECT MANAGER: MARCO SUAREZ. _____ DATE: _____

LATEST REVISION No. 2 DATE: 06-27-2023

THESE DRAWINGS REPRESENT DESIGN INTENT ONLY AND DO NOT INCLUDE VERIFICATION OF ANY STRUCTURAL, MECHANICAL, ELECTRICAL, OR LPUMBING. THE DESIGN CONCEPT REPRESENTATION INTENDS TO DEFINE THE SIZE, SHAPE, AND ARRANGEMENT OF SUAREZ CONTRACTING INC., PROJECT COMPONENTS FROM AVAILABLE INFORMATION AND SHALL BE VERIFIED AND APPROVED BY ALL RESPONSIBLE PARTIES INVOLVED IN ORDER TO CONSTRUCT IN COMLPIANCE WITH APLPICABLE CODES, REGULATIONS, ENGINEERING, CALCULATIONS, AND ENVIRONMENTAL CONDITIONS. THIS DRAWING IS PROPERTY OF SUAREZ CONTRACTING INC., AND MUST BE RETURNED UPON REQUEST. ANY USE OF INFORMATION CONTAINED HEREIN FOR USE IN FABRICATION BY ANYONE OTHER THAN SUAREZ CONTRACTING, INC MUST BE AUTHORIZED IN WRITING.

S.C.I.
SUAREZ CONTRACTING INC
CABINET MANUFACTURING & CUSTOM CABINETRY DESIGN
LICENSE # 1000000
12165 MADERA WAY, RIVERSIDE, CA 92503
Tel: 951-258-3075, FAX: 951-272-1764

No.	REVISION / ISSUE	DATE	BY
1.	REVISION / ISSUE	06-05-23	AG
2.	REVISION / ISSUE	06-27-23	AG
3.			

APROVED BY

DATE:

MIGUEL'S JR
SANTA ANA
1766 EAST MC FADEN AVE.
SANTA ANA , CA 92705

DRAW BY: ALGUTVER

PROJ. MGR.: MARCO SUAREZ

SCALE:

DATE: 04-13-2023

SHEET: W-11.0

FINISH SCHEDULE

ITEM	DESCRIPTION	LOCATION
LP-7	FORMICA: 464 GRAY STONE	EXTERIOR FACE & DOORS
LP-8	NEVAMAR # MR6002 CHARCOAL MATRIX	TOP & SLPASH & OVERHEAD SHELVES

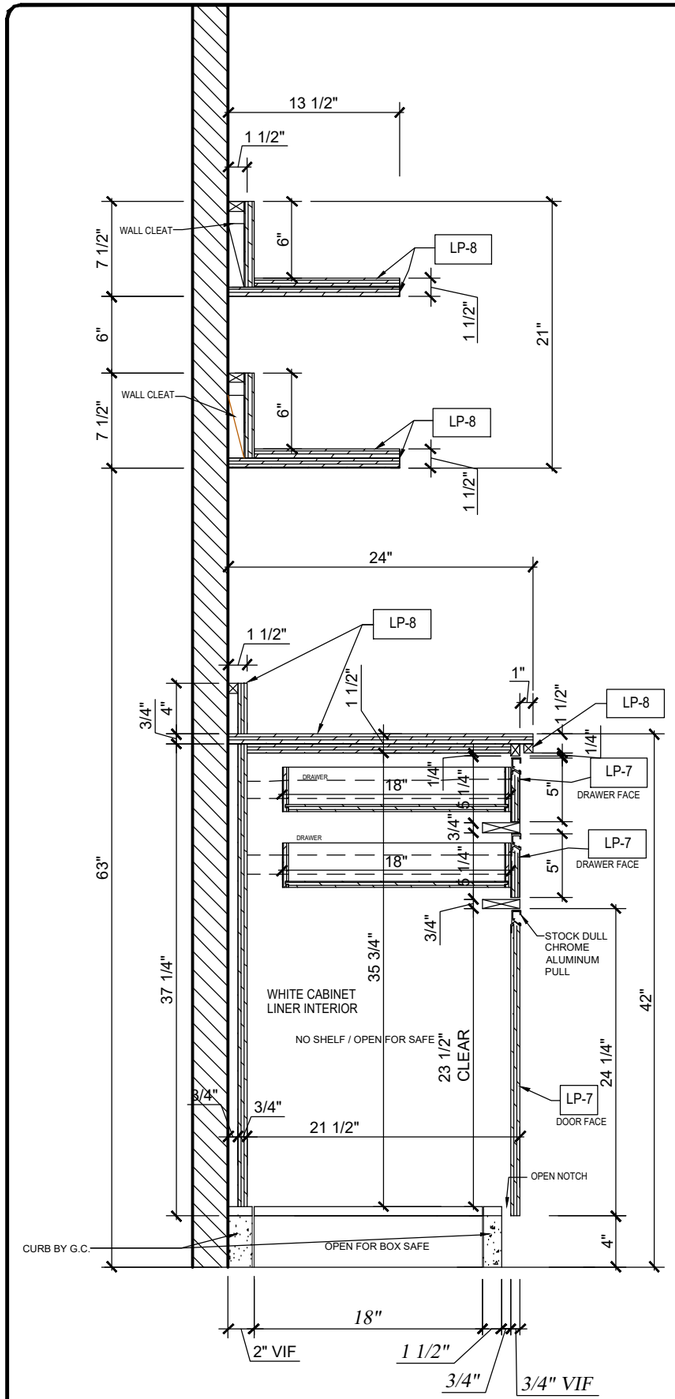

A SECTION
SCALE: 1" = 1'-00"

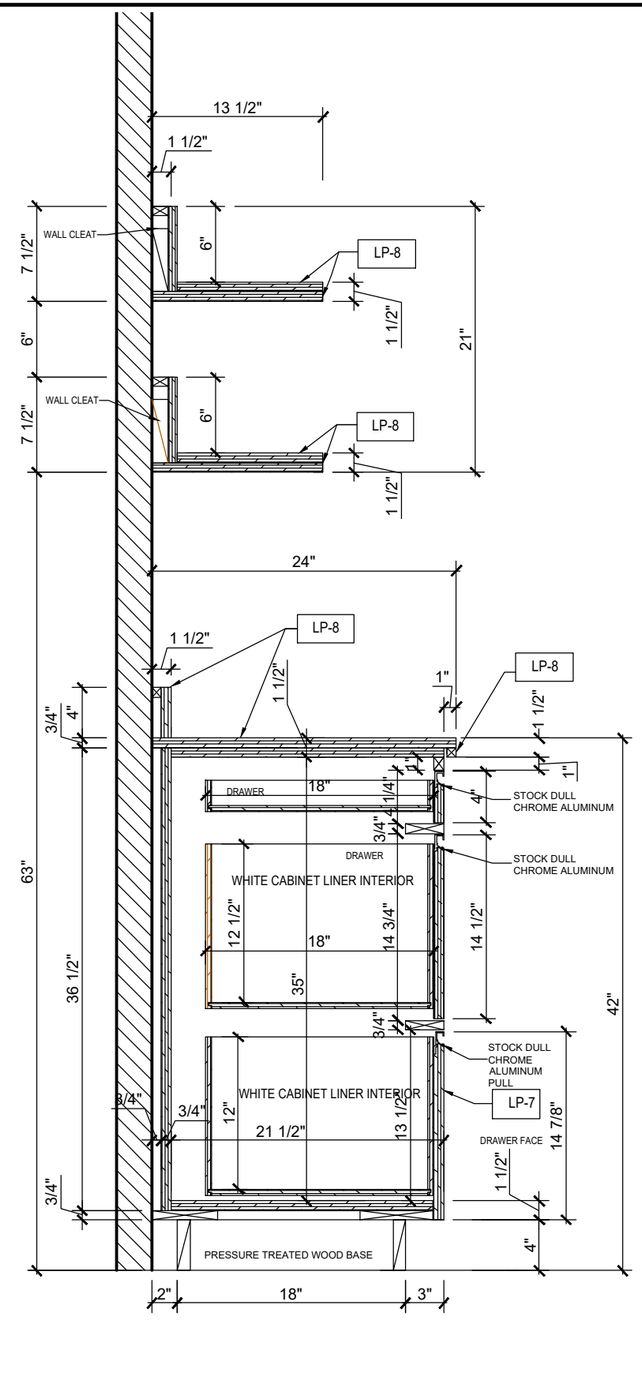

B SECTION
SCALE: 1" = 1'-00"

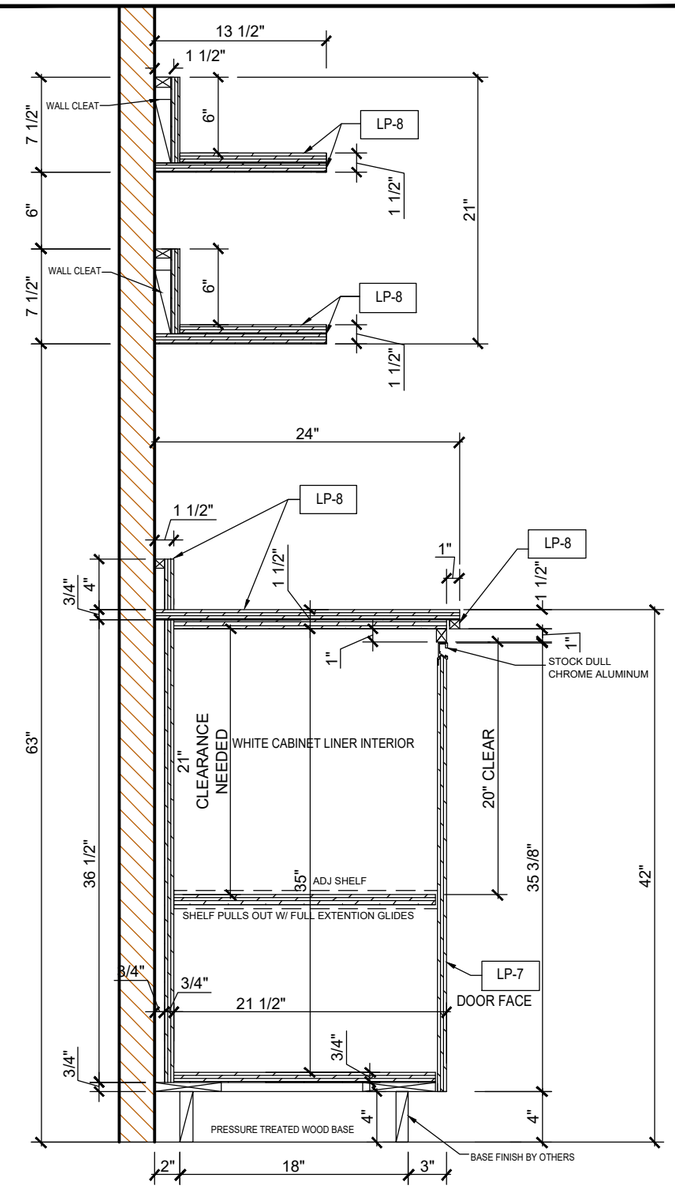

C SECTION
SCALE: 1" = 1'-00"

ITEM D-29 OFFICE DESK

NOT FOR FABRICATION: PROJECT MANAGER: MARCO SUAREZ. _____ DATE: _____

LATEST REVISION No. 2 DATE: 06-27-2023

THESE DRAWINGS REPRESENT DESIGN INTENT ONLY AND DO NOT INCLUDE VERIFICATION OF ANY STRUCTURAL, MECHANICAL, ELECTRICAL, OR LPUMBING. THE DESIGN CONCEPT REPRESENTATION INTENDS TO DEFINE THE SIZE, SHAPE, AND ARRANGEMENT OF SUAREZ CONTRACTING INC., PROJECT COMPONENTS FROM AVAILABLE INFORMATION AND SHALL BE VERIFIED AND APPROVED BY ALL RESPONSIBLE PARTIES INVOLVED IN ORDER TO CONSTRUCT IN COMLPIANCE WITH APLPICABLE CODES, REGULATIONS, ENGINEERING, CALCULATIONS, AND ENVIRONMENTAL CONDITIONS. THIS DRAWING IS PROPERTY OF SUAREZ CONTRACTING INC., AND MUST BE RETURNED UPON REQUEST. ANY USE OF INFORMATION CONTAINED HEREIN FOR USE IN FABRICATION BY ANYONE OTHER THAN SUAREZ CONTRACTING, INC MUST BE AUTHORIZED IN WRITING.

S.C.I. SUAREZ CONTRACTING INC
CABINETS & MILLWORK
LICENSE # 1000000
12165 MADERA WAY, RIVERSIDE, CA 92503
Tel: 951-258-3075, FAX: 951-272-1764

No.	REVISION / ISSUE	DATE	BY
1.	REVISION / ISSUE	06-05-23	AG
2.	REVISION / ISSUE	06-27-23	AG
3.			

APROVED BY

DATE:

MIGUEL'S JR
SANTA ANA
1766 EAST MC FADEN AVE.
SANTA ANA , CA 92705

DRAW BY: ALGUTVER
PROJ. MGR.: MARCO SUAREZ
SCALE:
DATE: 04-13-2023
SHEET: W-11.1

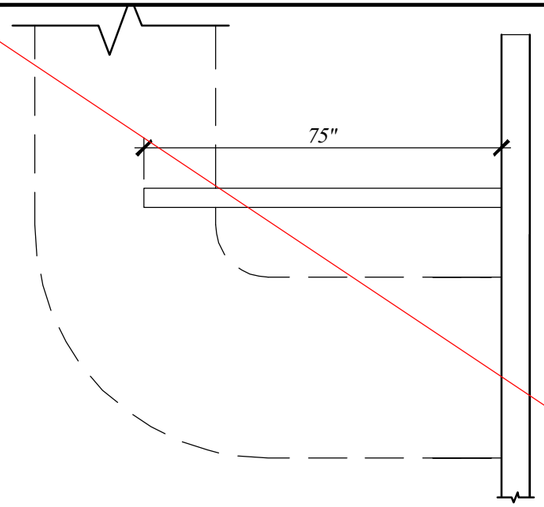

~ FLOOR PLAN
SCALE: 3/8" = 1'-00"

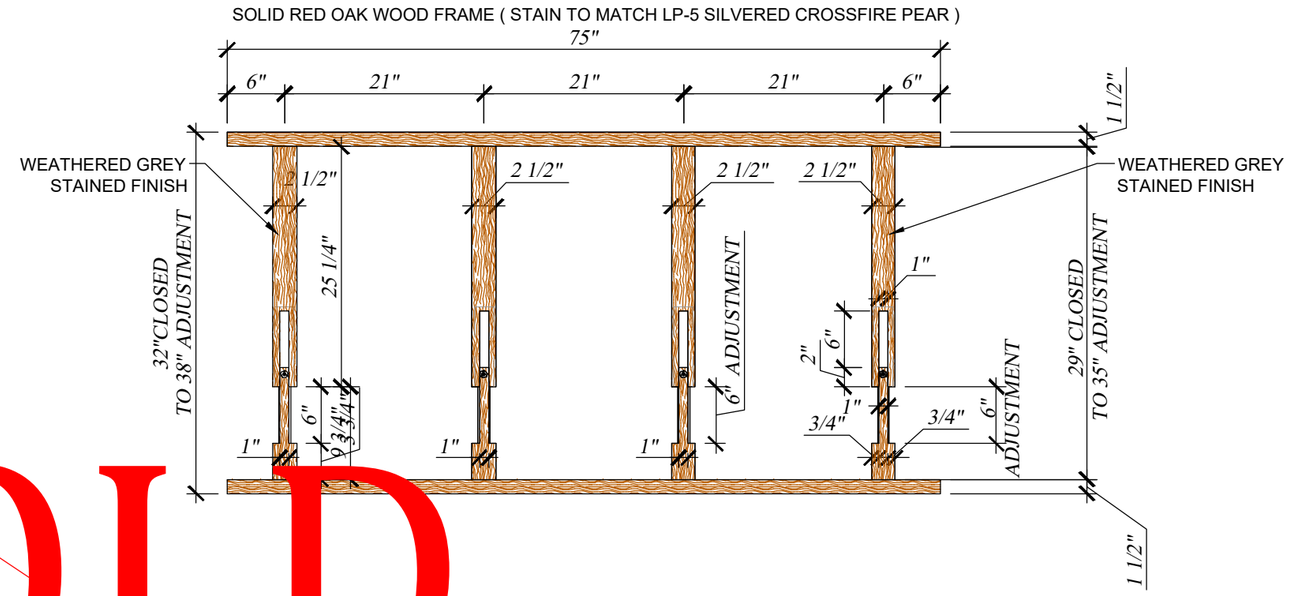

2 FRONT ELEVATION VIEW
SCALE: 3/4" = 1'-00"

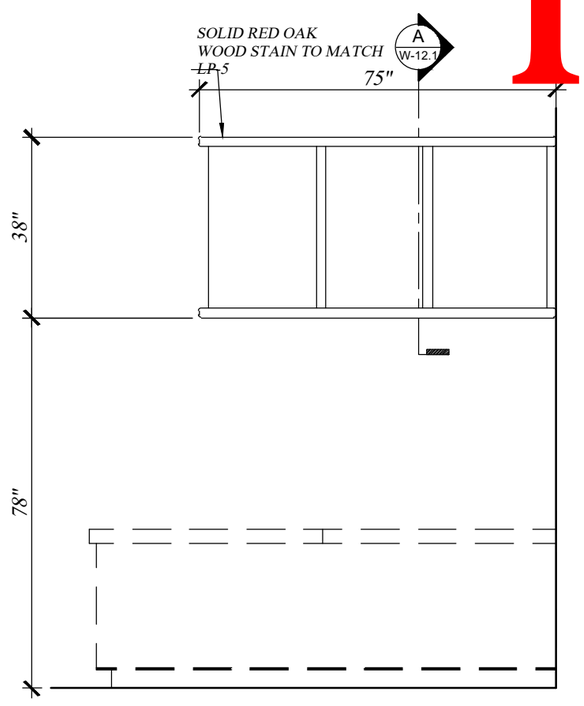

1 ELEVATION
SCALE: 3/8" = 1'-00"

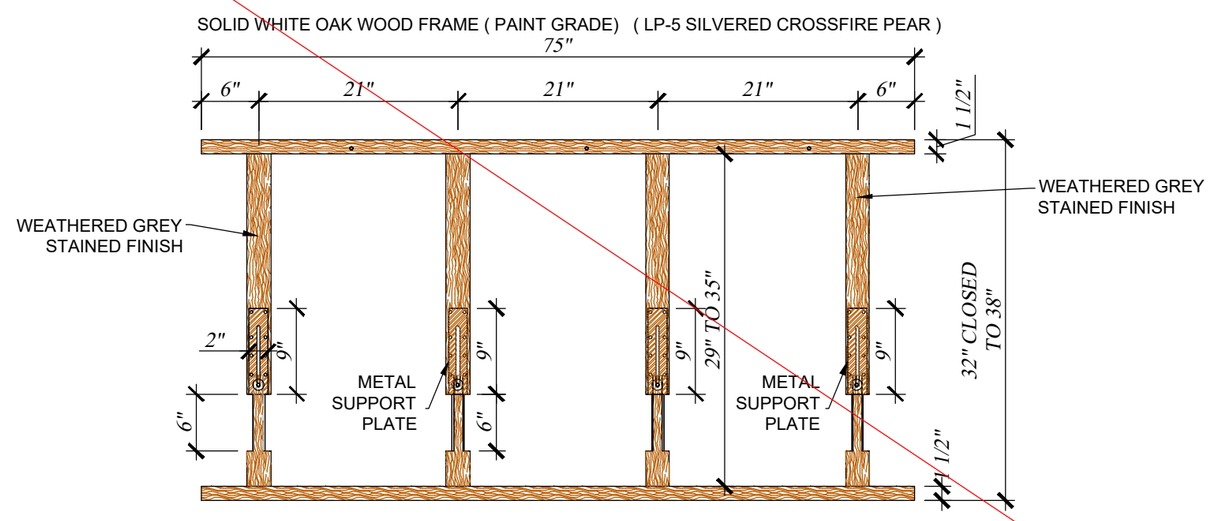

3 BACK ELEVATION VIEW
SCALE: 3/4" = 1'-00"

ITEM D-41 MENU BOARD

NOT FOR FABRICATION: PROJECT MANAGER: MARCO SUAREZ. _____ DATE: _____

LATEST REVISION No. 2 DATE: 06-27-2023

THESE DRAWINGS REPRESENT DESIGN INTENT ONLY AND DO NOT INCLUDE VERIFICATION OF ANY STRUCTURAL, MECHANICAL, ELECTRICAL, OR LPUMBING. THE DESIGN CONCEPT REPRESENTATION INTENDS TO DEFINE THE SIZE, SHAPE, AND ARRANGEMENT OF SUAREZ CONTRACTING INC., PROJECT COMPONENTS FROM AVAILABLE INFORMATION AND SHALL BE VERIFIED AND APPROVED BY ALL RESPONSIBLE PARTIES INVOLVED IN ORDER TO CONSTRUCT IN COMLPIANCE WITH APLPICABLE CODES, REGULATIONS, ENGINEERING, CALCULATIONS, AND ENVIRONMENTAL CONDITIONS. THIS DRAWING IS PROPERTY OF SUAREZ CONTRACTING INC., AND MUST BE RETURNED UPON REQUEST. ANY USE OF INFORMATION CONTAINED HEREIN FOR USE IN FABRICATION BY ANYONE OTHER THAN SUAREZ CONTRACTING, INC MUST BE AUTHORIZED IN WRITING.

S.C.I.
SUAREZ CONTRACTING INC
CUSTOM CABINETRY DESIGN
LICENSE # 1000863
12165 MADERA WAY, RIVERSIDE, CA 92503
Tel: 951-258-3075, FAX: 951-272-1764

No.	REVISION / ISSUE	DATE	BY
1.	REVISION / ISSUE	06-05-23	AG
2.	REVISION / ISSUE	06-27-23	AG
3.			

APROVED BY

DATE:

MIGUEL'S JR
SANTA ANA
1766 EAST MC FADEN AVE.
SANTA ANA , CA 92705

DRAW BY
ALGUTVER

PROJ. MGR.
MARCO SUAREZ

SCALE:

DATE: 04-13-2023

SHEET
W-12.0

HOLD

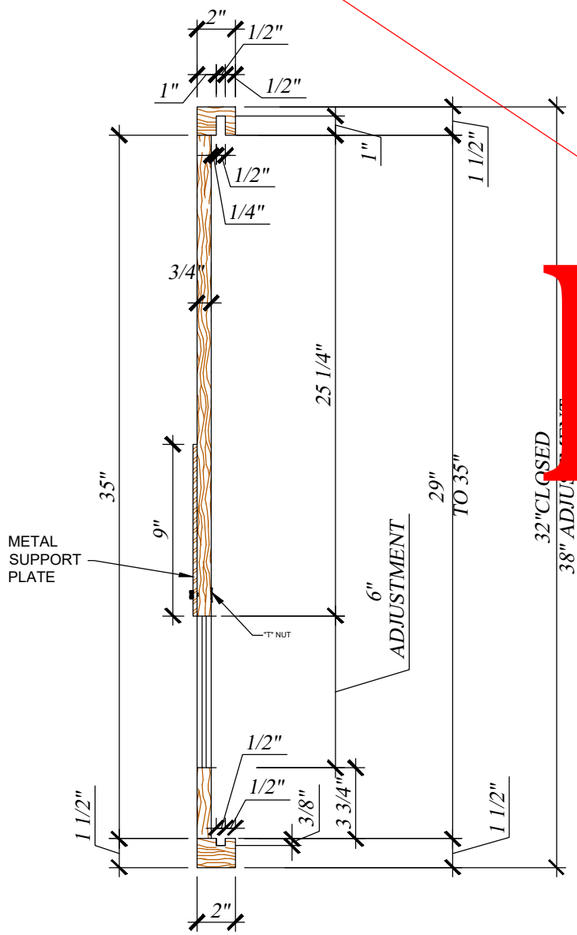

NOTE:MENU BOARDS
SIZES ARE:
$\frac{3}{16}$" THICK X 16" WIDTH X 30" HEIGHT

A SECTION
SCALE: 1-1/2" = 1'-00"

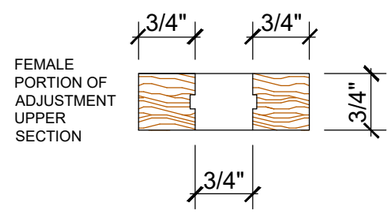

D1 DETAIL
SCALE: 6" = 1'-00"

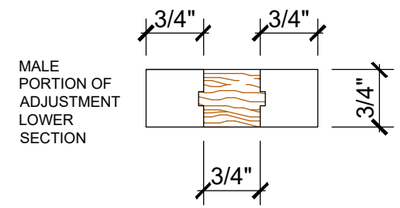

D1 DETAIL
SCALE: 6" = 1'-00"

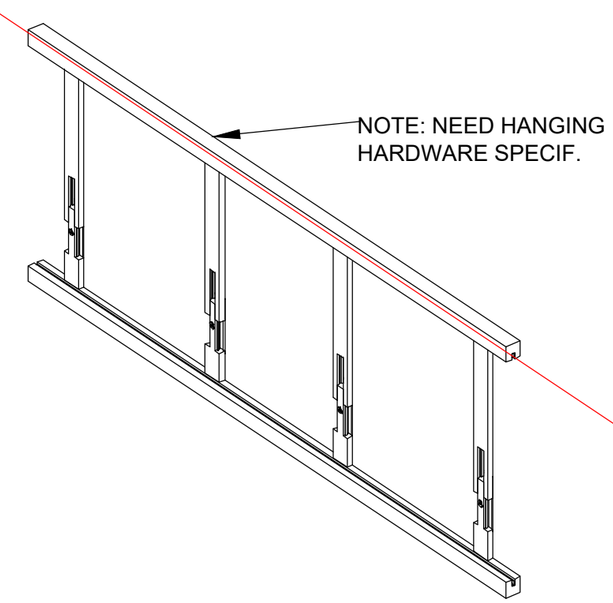

~ ISO VIEW
N.T.S.

HOLD

ITEM D-41 MENU BOARD

NOT FOR FABRICATION: PROJECT MANAGER: MARCO SUAREZ. _____ DATE: _____

LATEST REVISION No. 2 DATE:06-27-2023

THESE DRAWINGS REPRESENT DESIGN INTENT ONLY AND DO NOT INCLUDE VERIFICATION OF ANY STRUCTURAL, MECHANICAL, ELECTRICAL, OR LPUMBING. THE DESIGN CONCEPT REPRESENTATION INTENDS TO DEFINE THE SIZE, SHAPE, AND ARRANGEMENT OF SUAREZ CONTRACTING INC., PROJECT COMPONENTS FROM AVAILABLE INFORMATION AND SHALL BE VERIFIED AND APPROVED BY ALL RESPONSIBLE PARTIES INVOLVED IN ORDER TO CONSTRUCT IN COMLPIANCE WITH APLPICABLE CODES, REGULATIONS, ENGINEERING, CALCULATIONS, AND ENVIRONMENTAL CONDITIONS. THIS DRAWING IS PROPERTY OF SUAREZ CONTRACTING INC., AND MUST BE RETURNED UPON REQUEST. ANY USE OF INFORMATION CONTAINED HEREIN FOR USE IN FABRICATION BY ANYONE OTHER THAN SUAREZ CONTRACTING, INC MUST BE AUTHORIZED IN WRITING.

S.C.I.
SUAREZ CONTRACTING INC
CABINETS & FIXTURES
LICENSE #
1000000
12165 MADERA WAY, RIVERSIDE, CA 92503
Tel: 951-258-3075, FAX: 951-272-1764

No.	REVISION / ISSUE	DATE	BY
1.	REVISION / ISSUE	06-05-23	AG
2.	REVISION / ISSUE	06-27-23	AG
3.			

APROVED BY

DATE:

MIGUEL'S JR
SANTA ANA
1766 EAST MC FADEN AVE.
SANTA ANA , CA 92705

DRAW BY
ALGUTVER

PROJ. MGR.
MARCO SUAREZ

SCALE:

DATE: 04-13-2023

SHEET
W-12.1