MCI

Millwork Concepts, Inc.
12345 Front Street, Norwalk, CA 90650
Ph: 565-355-7272, Fax 562-406-8888
Alfredo Castillo

PITFIRE ARTISAN PIZZA

7720 EL CAMINO REAL
CARLSBAD, CA 92009

ARCHITECT

CONQUEST ARCHITECTURE
603 EASTFORT KING STREET

OCALA, FLORIDA 34471

GENERAL CONTRACTOR

TERRA NOVA INDUSTRIES
–
–

SUBMITTAL DATE
07-011-2023

REVISION DATE
00-00-0000

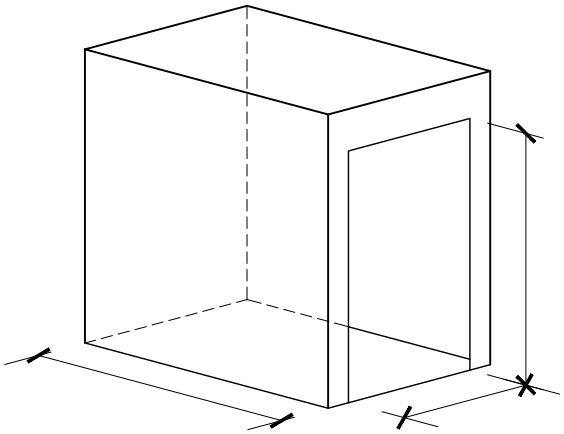

GENERAL NOTES:

* COORDINATE ALL CUT-OUT INTO CT-01 WITH OWNER PRIOR TO CUTTING.
* OWNER TO REVIEW
* COORDINATE ALL POWER & DATA REQUIREMENTS WITH OWNER PRIOR TO CLOSING WALLS/CABINETS

ARCHITECT NOTES:

LEGEND

APPROVAL

APPROVAL STAMP

M.C.I. JOB # -

THESE DRAWINGS REPRESENT DESIGN INTENT ONLY AND DO NOT INCLUDE VERIFICATION OF ANY STRUCTURAL, MECHANICAL, ELECTRICAL, OR PLUMBING FEATURES. CONTRACTOR SHALL BE RESPONSIBLE FOR ALL DIMENSIONS AND CONDITIONS AND ARRANGEMENTS OF MILLWORK CONCEPTS, INC. PRODUCTS COMPONENTS FROM AVAILABLE INFORMATION AND SHALL BE VERIFIED AND APPROVED BY ALL PROFESSIONALS CONCERNED. ALL WORK SHALL BE PERFORMED IN ACCORDANCE WITH APPLICABLE CODES, REGULATIONS, ENGINEERING, CALCULATIONS, AND PROFESSIONAL CONSTRUCTION STANDARDS.
THIS DRAWING IS PROPERTY OF MILLWORK CONCEPTS, INC. AND MUST BE RETURNED UPON REQUEST. ANY USE OF INFORMATION CONTAINED HEREIN FOR ANY OTHER PURPOSE THAN THAT AUTHORIZED BY MILLWORK CONCEPTS, INC. IS NOT AUTHORIZED IN WRITING.

No.	REVISION	DATE
1	REVISION	00-00-00

MCI
Millwork Concepts, Inc.
12345 Front Street, Norwalk, CA 90650
Ph: 565-355-7272, Fax 562-406-8888
Alfredo Castillo

APROVED BY :

DATE:

PITFIRE ARTISAN PIZZA
PITFIRE PIZZA
CARLSBAD
7720 EL CAMINO REAL, CARLSBAD
CALIFORNIA 92009

ARCHITECT: CONQUEST ARCHITECTURE
CONTRACTOR: -
DRAW BY ALGUTVER
PROJ. MGR. ALFREDO CASTILLO
SCALE: AS NOTED
DATE: 06-22-2023
SHEET CS

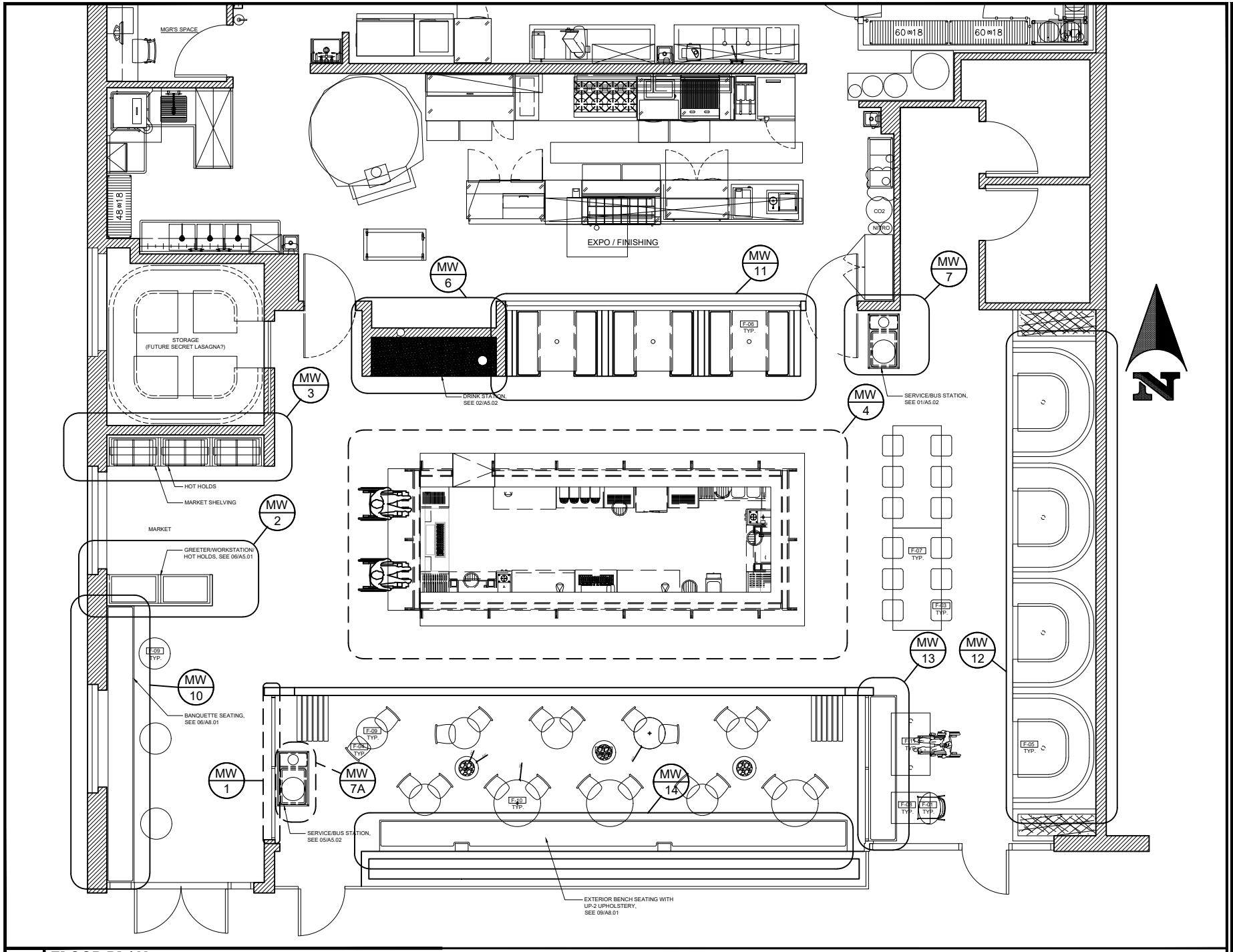

FLOOR PLAN

SCALE: 1/8" = 1'-00"

THESE DRAWINGS REPRESENT DESIGN INTENT ONLY AND DO NOT INCLUDE VERIFICATION OF ANY STRUCTURAL, MECHANICAL, ELECTRICAL, OR PLUMBING FEATURES. THE CONTRACTOR SHALL BE RESPONSIBLE FOR THE ACCURACY OF ALL AND ARRANGEMENTS OF MILLWORK CONCEPTS, INC. PROJECT COMPONENTS FROM AVAILABLE INFORMATION AND SHALL BE VERIFIED AND APPROVED BY ALL WITH APPLICABLE CODES REGULATIONS, ENGINEERING CALCULATIONS, AND ACTUAL FIELD CONDITIONS.
THIS DRAWING IS PROPERTY OF MILLWORK CONCEPTS, INC. AND MUST BE RETURNED UPON REQUEST. ANY USE OF INFORMATION CONTAINED THEREIN FOR ANY OTHER PURPOSE THAN THE INTENDED PROJECT, OR ANY REPRODUCTION, IN WHOLE OR IN PART, IS NOT AUTHORIZED IN WRITING.

No.	REVISION	DATE
1	REVISION	00-00-00

MCI
Millwork Concepts, Inc.
12345 Front Street, Norwalk, CA 90650
Ph. 565-355-7272, Fax 562-406-8888
Alfredo Castillo

APROVED BY :

DATE:

PITFIRE ARTISAN PIZZA
PITFIRE PIZZA
CARLSBAD
7720 EL CAMINO REAL, CARLSBAD
CALIFORNIA 92009

ARCHITECT: CONQUEST ARCHITECTURE
CONTRACTOR: -
DRAW BY ALGUTVER
PROJ. MGR. ALFREDO CASTILLO
SCALE: AS NOTED
DATE: 06-22-2023
SHEET FP

WORK SCHEDULE
MISC. MILLWORK, AND CARPENTRY

ITEM	DESCRIPTION
1.0	MERCHANDISE DISPLAY (PENDING)
2.0	GREETER - WORK STATION - HOLD HOLDS
3.0	MARKET SHELVING
4.0	MAIN BAR
5.0	MENU SIGNAGE FIN ABOVE (PENDING)
6.0	DRINK STATION
7.0	SERVICE -BUSINESS STATION
7.0A	SERVICE -BUSINESS STATION
8.0	NOT USED THIS TIME
9.0	NOT USED THIS TIME
10.0	BANQUETTE SEATING
11.0	BOOTH AND TABLES
12.0	PULLMAN TABLE
13.0	PULLMAN TABLE
14.0	EXTERIOR BENCH SEATING (CUSHION ONLY)
15.0	COMMUNAL TABLES,PATIO TABLES & CHAIRS (EXCLUDED, BY OTHERS)

TABLE TOP SHEDULE

TYPE	QTY.	SIZE	FINISH	BASE BLACK WRINKLE	DESCRIPTION
F-05	4	39"x 48 3/4"	LM-1	18" ROUND (4 REQUIRED)	HOLLYWOOD TABLE
F-06	3	30"x 46 3/4"	LM-1	18" ROUND (3 REQUIRED)	PULLMAN TABLE
F-08	2	24"x 30 "	LM-1	18" ROUND (3 REQUIRED)	CAFE TABLE
F-09	8	24" DIAM.	ST-1	18" ROUND (3 REQUIRED)	EXTERIOR TABLE
F-10	2	36" DIAM.	ST-1	18" ROUND (2 REQUIRED)	EXTERIOR TABLE
F-11	1	30"x 48 "	LM-1	18" ROUND (1 REQUIRED)	CAFE TABLE
F-10	2	36" DIAM.	ST-1	18" ROUND (2 REQUIRED)	EXTERIOR TABLE
F-11	1	75" DIAM.	ST-1	VERIFY	SECRET LASAGNA ROOM

FINISH SCHEDULE

FINISH	DESCRIPTION
ST-1	SOLID SURFACE (WHITE) AVONITE WHITE 8016 FINISH
ST-2	SOLID SURFACE (RED) AVONITE FUEGO 8248 FINISH
LM-1	LAMINATE TABLE TOP - ABET LAMINATE GLOSS WHITE FINISH
PLY-1	NATURAL ROTARY CUT PLY - DOUG FIR - CLEAR SEAL, MATTE FINISH
PLY-2	STAINED ROTARY CUT PLY - DOUG FIR - GREEN STAIN, CLEAR SEAL MATTE FINISH
PT-3	ACCENT COLOR (RED) BENJAMIN MOORE - RED 2000-10 - SEMI GLOSS
PT-4	ACCENT COLOR (PINK) DUNN EDWARDS - PALE JASPER DE5148 - SEMI GLOSS
UP-1	LEATHERETTE BOOTH CUSHIONS - ARC COM MODEL: BRONCO AC-69371 PERSSIMON # 12
UP-2	LINEN BOOTH CUSHIONS - SUMBRELLA MODEL: UPHOLSTERY- MANHATTAN CLASSIC
RB-1	RUBBER COVE BASE - ROPPE - PINNACLE OR EQUIVALENT - 174 SMOKE (VIF)
MEDEX	MEDEX WHITE COLOR

THESE DRAWINGS REPRESENT DESIGN INTENT ONLY AND DO NOT INCLUDE VERIFICATION OF ANY STRUCTURAL, MECHANICAL, ELECTRICAL, OR PLUMBING FEATURES. THEY ARE PROVIDED AS A GUIDE TO BE USED IN CONJUNCTION WITH ALL OTHER DRAWINGS AND ARRANGEMENTS OF MILLWORK CONCEPTS, INC. PROJECT COMPONENTS FROM AVAILABLE INFORMATION AND SHALL BE VERIFIED AND APPROVED BY ALL PARTIES CONCERNED. THE CONTRACTOR SHALL BE RESPONSIBLE FOR ALL WORK WITH APPLICABLE CODES, REGULATIONS, ENGINEERING CALCULATIONS, AND OTHER ASPECTS OF CONSTRUCTION.
THIS DRAWING IS PROPERTY OF MILLWORK CONCEPTS, INC. AND MUST BE RETURNED UPON REQUEST. ANY USE OF INFORMATION CONTAINED HEREIN FOR ANY PURPOSE OTHER THAN THE ORIGINAL INTENT OF THIS DRAWING SHALL NOT BE AUTHORIZED IN WRITING.

No.	REVISION	DATE
1	REVISION	00-00-00

MCI
Millwork Concepts, Inc.
12345 Front Street, Norwalk, CA 90650
Ph. 565-355-7272, Fax 562-406-8888
Alfredo Castillo

APROVED BY :

DATE:

PITFIRE ARTISAN PIZZA
PITFIRE PIZZA
CARLSBAD
7720 EL CAMINO REAL, CARLSBAD
CALIFORNIA 92009

ARCHITECT: CONQUEST ARCHITECTURE
CONTRACTOR: -
DRAW BY ALGUTVER
PROJ. MGR. ALFREDO CASTILLO
SCALE: AS NOTED
DATE: 06-22-2023
SHEET SPEC.

MERCHANDISE DISPLAY (PENDING)

~ PLAN VIEW
SCALE:1/4" = 1'-00"

MERCHANDISE DISPLAY PENDING

FOR REFERENCE ONLY

NOT FOR FABRICATION

THESE DRAWINGS REPRESENT DESIGN INTENT ONLY AND DO NOT INCLUDE VERIFICATION OF ANY STRUCTURAL, MECHANICAL, ELECTRICAL, OR PLUMBING FEATURES. CONTRACTOR SHALL VERIFY ALL DIMENSIONS, CONDITIONS, MATERIALS AND ARRANGEMENTS OF MILLWORK CONCEPTS, INC. PRODUCTS COMPONENTS FROM AVAILABLE INFORMATION AND SHALL BE VERIFIED AND APPROVED BY ALL REGULATORY AGENCIES HAVING JURISDICTION. ALL PRODUCTS SHALL COMPLY WITH APPLICABLE CODES, REGULATIONS, ENGINEERING, CALCULATIONS, AND INDUSTRY STANDARDS AND PRACTICES.
THIS DRAWING IS PROPERTY OF MILLWORK CONCEPTS, INC. AND MUST BE RETURNED UPON REQUEST. ANY USE OF INFORMATION CONTAINED HEREIN FOR ANY PURPOSE OTHER THAN THAT FOR WHICH IT WAS INTENDED, IS NOT TO BE AUTHORIZED IN WRITING.

No.	REVISION	DATE
1	REVISION	00-00-00

MCI
Millwork Concepts, Inc.
12345 Front Street, Norwalk, CA 90650
Ph. 565-355-7272, Fax 562-406-8888
Alfredo Castillo

APROVED BY :

DATE:

PITFIRE ARTISAN PIZZA
PITFIRE PIZZA
CARLSBAD
7720 EL CAMINO REAL, CARLSBAD
CALIFORNIA 92009

ARCHITECT: CONQUEST ARCHITECTURE
CONTRACTOR: -
DRAW BY ALGUTVER
PROJ. MGR. ALFREDO CASTILLO
SCALE: AS NOTED
DATE: 06-22-2023
SHEET MW-1

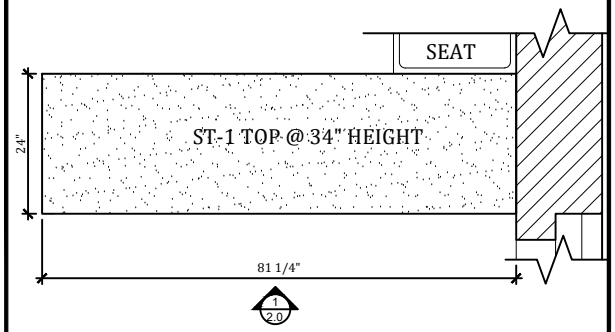

~ PLAN VIEW
SCALE:3/8" = 1'-00"

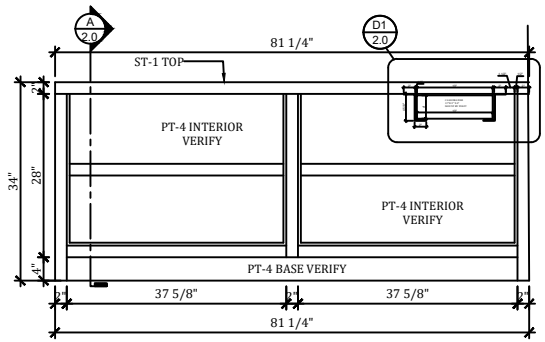

1 ELEVATION
SCALE:3/8" = 1'-00"

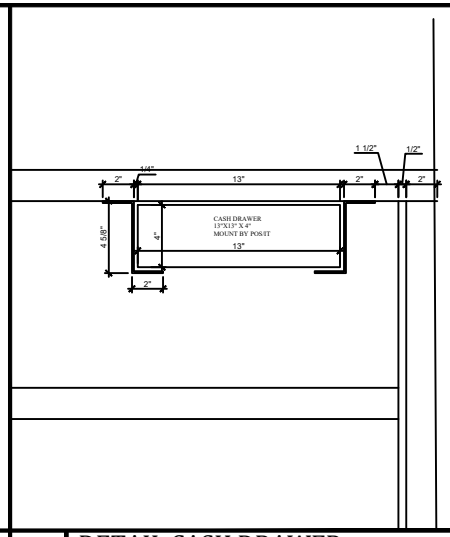

D1 DETAIL CASH DRAWER
SCALE: 1" = 1'-00"

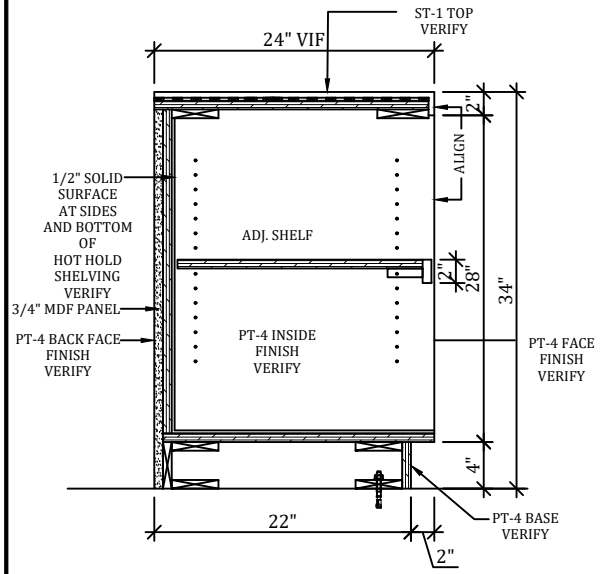

A SECTION
SCALE: 1" = 1'-00"

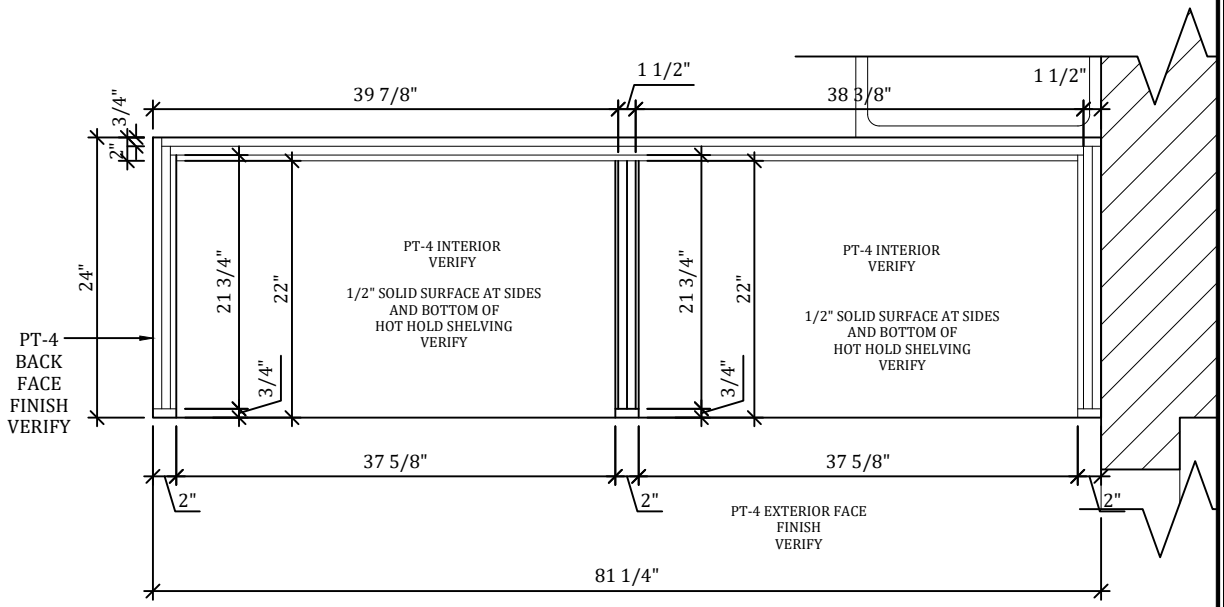

B PLAN SECTION
SCALE: 1" = 1'-00"

GREETTER / WORK STATION / HOT HOLDS

FOR REFERENCE ONLY

NOT FOR FABRICATION

THESE DRAWINGS REPRESENT DESIGN INTENT ONLY AND DO NOT INCLUDE VERIFICATION OF ANY STRUCTURAL, MECHANICAL, ELECTRICAL, OR PLUMBING DATA. THE CONTRACTOR SHALL BE RESPONSIBLE FOR THE ACCURACY OF ALL DATA AND ARRANGEMENTS OF MILLWORK CONCEPTS, INC. PROJECT COMPONENTS FROM AVAILABLE INFORMATION AND SHALL BE VERIFIED AND APPROVED BY ALL APPLICABLE CODES, REGULATIONS, ENGINEERING, CALCULATIONS, AND WITH APPLICABLE CODES, REGULATIONS, ENGINEERING, CALCULATIONS, AND OTHER DATA AS CONDITIONS REQUIRE.
THIS DRAWING IS PROPERTY OF MILLWORK CONCEPTS, INC. AND MUST BE RETURNED UPON REQUEST. ANY USE OF INFORMATION CONTAINED HEREIN FOR ANY PURPOSE OTHER THAN THE PROJECT FOR WHICH IT WAS PREPARED MUST BE AUTHORIZED IN WRITING.

No.	REVISION	DATE
1	REVISION	00-00-00

MCI
Millwork Concepts, Inc.
12345 Front Street, Norwalk, CA 90650
Ph. 565-355-7272, Fax 562-406-8888
Alfredo Castillo

APROVED BY :

DATE:

PITFIRE ARTISAN PIZZA
PITFIRE PIZZA
CARLSBAD
7720 EL CAMINO REAL, CARLSBAD
CALIFORNIA 92009

ARCHITECT: CONQUEST ARCHITECTURE
CONTRACTOR: -
DRAW BY ALGUTVER
PROJ. MGR. ALFREDO CASTILLO
SCALE: AS NOTED
DATE: 06-22-2023
SHEET MW-2

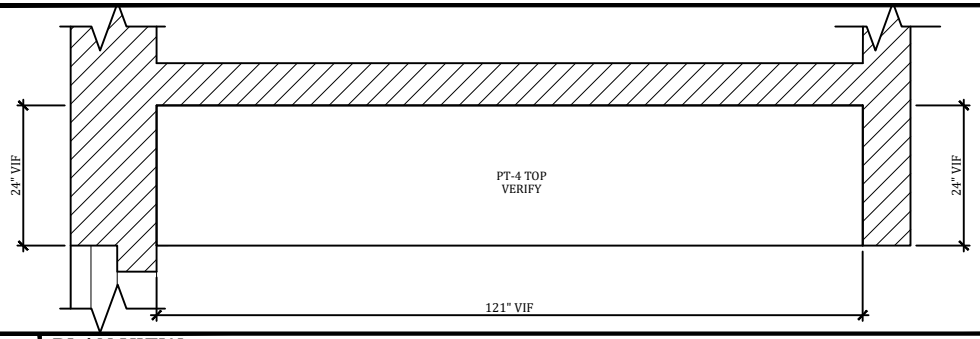

~ PLAN VIEW
SCALE:3/8" = 1'-00"

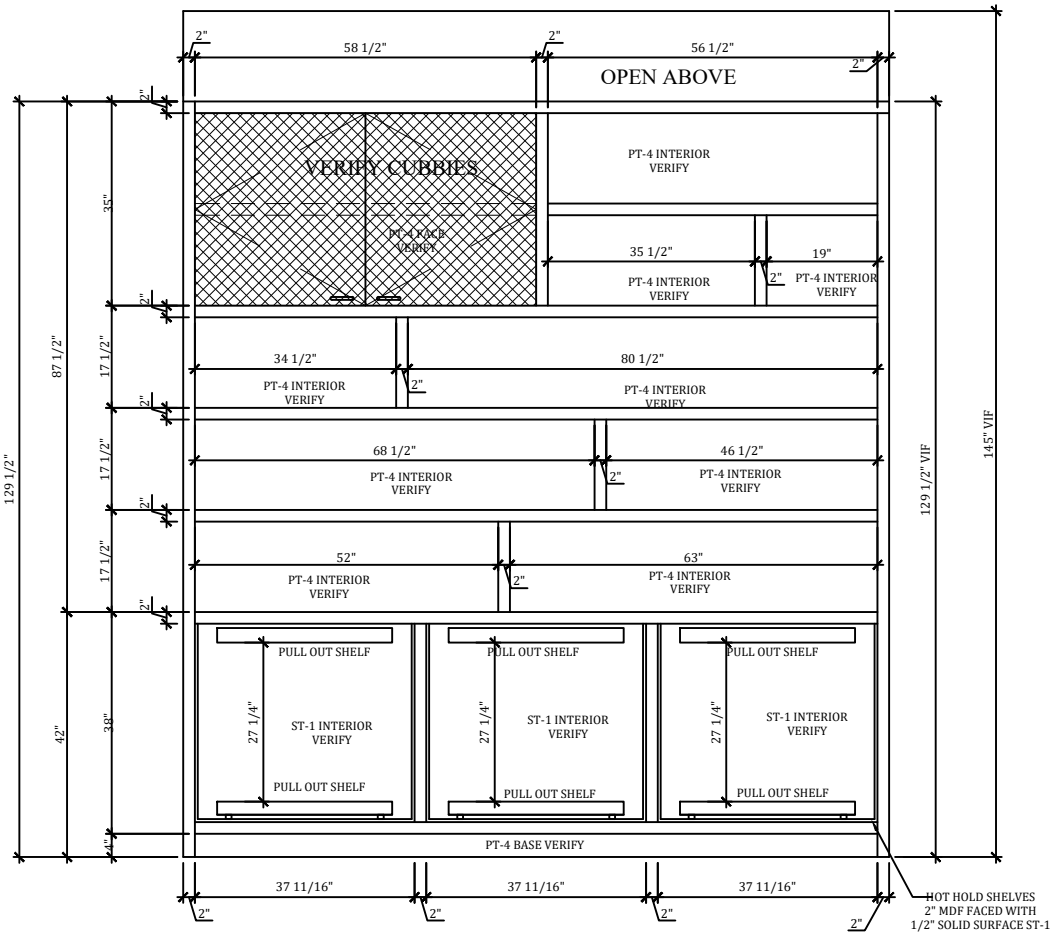

1 ELEVATION
SCALE: 3/8" = 1'-00"

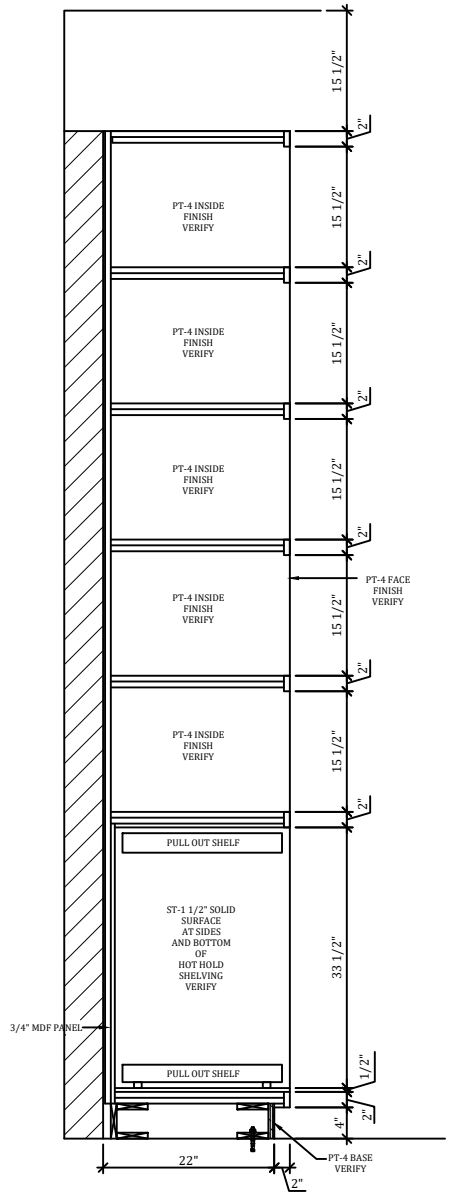

A SECTION
SCALE: 1/2" = 1'-00"

MARKET SHELVING / HOLD HOLDS

FOR REFERENCE ONLY

NOT FOR FABRICATION

THESE DRAWINGS REPRESENT DESIGN INTENT ONLY AND DO NOT INCLUDE VERIFICATION OF ANY STRUCTURAL, MECHANICAL, ELECTRICAL, OR PLUMBING DESIGN. THE CONTRACTOR SHALL BE RESPONSIBLE FOR ALL DIMENSIONS, CONDITIONS AND ARRANGEMENTS OF MILLWORK CONCEPTS, INC. PRODUCTS COMPONENTS FROM AVAILABLE INFORMATION AND SHALL BE VERIFIED AND APPROVED BY ALL PERTINENT PARTIES. CONSTRUCTION SHALL BE PERFORMED IN ACCORDANCE WITH ALL APPLICABLE CODES, REGULATIONS, ENGINEERING, CALCULATIONS, AND STANDARDS OF CONSTRUCTION.
THIS DRAWING IS PROPERTY OF MILLWORK CONCEPTS, INC. AND MUST BE RETURNED UPON REQUEST. ANY USE OF INFORMATION CONTAINED HEREIN FOR THE BENEFIT OF ANYONE OTHER THAN MILLWORK CONCEPTS, INC. WILL NOT BE AUTHORIZED IN WRITING.

No.	REVISION	DATE
1	REVISION	00-00-00

MCI
Millwork Concepts, Inc.
12345 Front Street, Norwalk, CA 90650
Ph. 565-355-7272, Fax 562-406-8888
Alfredo Castillo

APROVED BY :

DATE:

PITFIRE ARTISAN PIZZA
PITFIRE PIZZA
CARLSBAD
7720 EL CAMINO REAL, CARLSBAD
CALIFORNIA 92009

ARCHITECT: CONQUEST ARCHITECTURE
CONTRACTOR: -
DRAW BY ALGUTVER
PROJ. MGR. ALFREDO CASTILLO
SCALE: AS NOTED
DATE: 06-22-2023
SHEET MW-3

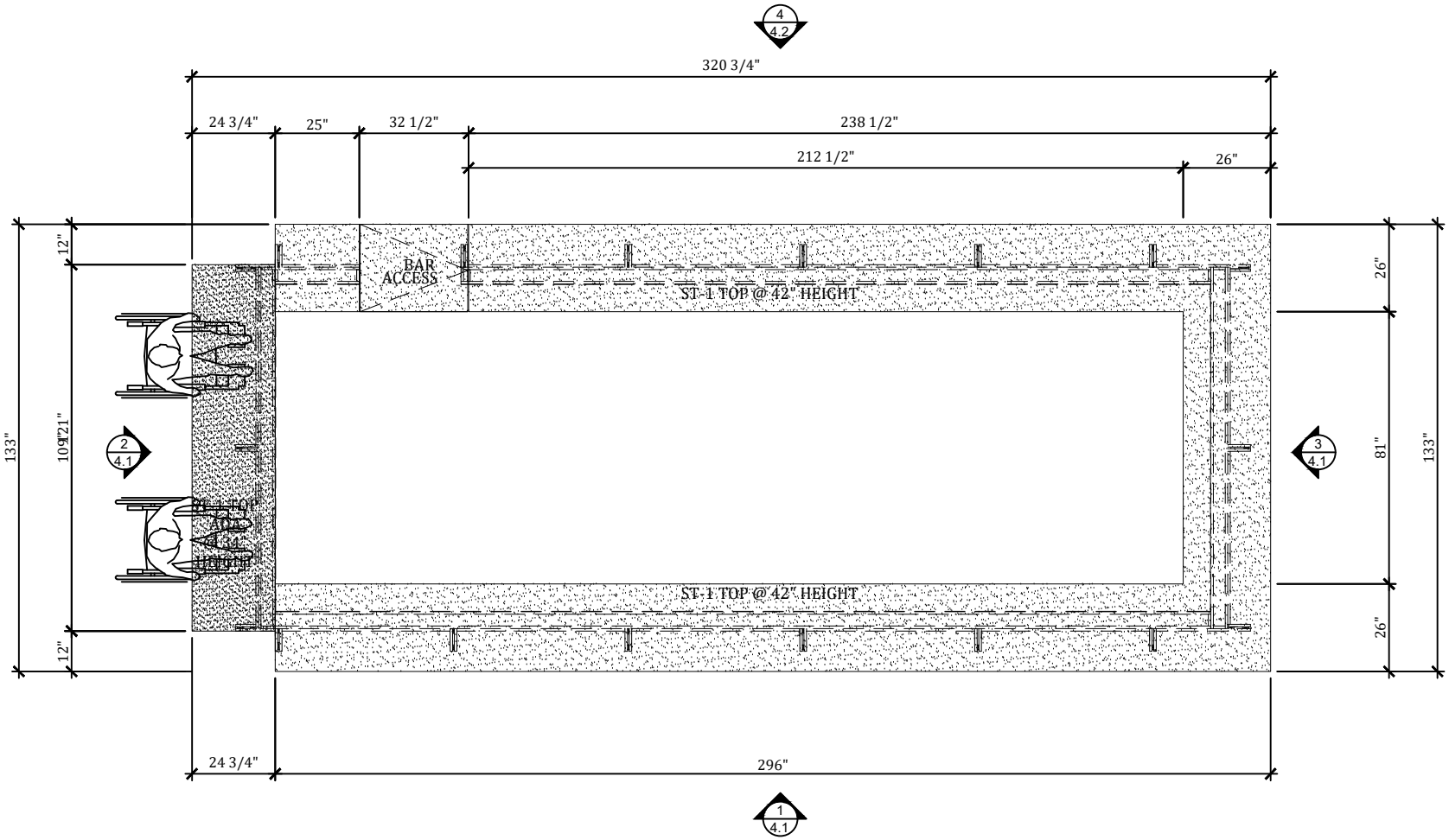

PLAN VIEW
SCALE:1/4" = 1'-00"

BAR

FOR REFERENCE ONLY

NOT FOR FABRICATION

THESE DRAWINGS REPRESENT DESIGN INTENT ONLY AND DO NOT INCLUDE VERIFICATION OF ANY STRUCTURAL, MECHANICAL, ELECTRICAL, OR PLUMBING DESIGN CONSIDERATIONS. THE INFORMATION CONTAINED HEREIN IS BASED ON PLANS AND ARRANGEMENTS OF MILLWORK CONCEPTS, INC. PROJECT COMPONENTS FROM AVAILABLE INFORMATION AND SHALL BE VERIFIED AND APPROVED BY ALL PROFESSIONALS CONTROLLING THE DESIGN OF THE PROJECT. THE PROJECT MUST COMPLY WITH APPLICABLE CODES, REGULATIONS, ENGINEERING, CALCULATIONS, AND PROFESSIONAL CONTROLS OF THE PROJECT.
THIS DRAWING IS PROPERTY OF MILLWORK CONCEPTS, INC. AND MUST BE RETURNED UPON REQUEST. ANY USE OF INFORMATION CONTAINED HEREIN FOR ANY PURPOSE OTHER THAN THE PROJECT FOR WHICH IT WAS PREPARED MUST BE AUTHORIZED IN WRITING.

No.	REVISION	DATE
1	REVISION	00-00-00

MCI
Millwork Concepts, Inc.
12345 Front Street, Norwalk, CA 90650
Ph. 565-355-7272, Fax 562-406-8888
Alfredo Castillo

APROVED BY :

DATE:

PITFIRE ARTISAN PIZZA
PITFIRE PIZZA
CARLSBAD
7720 EL CAMINO REAL, CARLSBAD
CALIFORNIA 92009

ARCHITECT: CONQUEST ARCHITECTURE
CONTRACTOR: -
DRAW BY ALGUTVER
PROJ. MGR. ALFREDO CASTILLO
SCALE: AS NOTED
DATE: 06-22-2023
SHEET MW-4

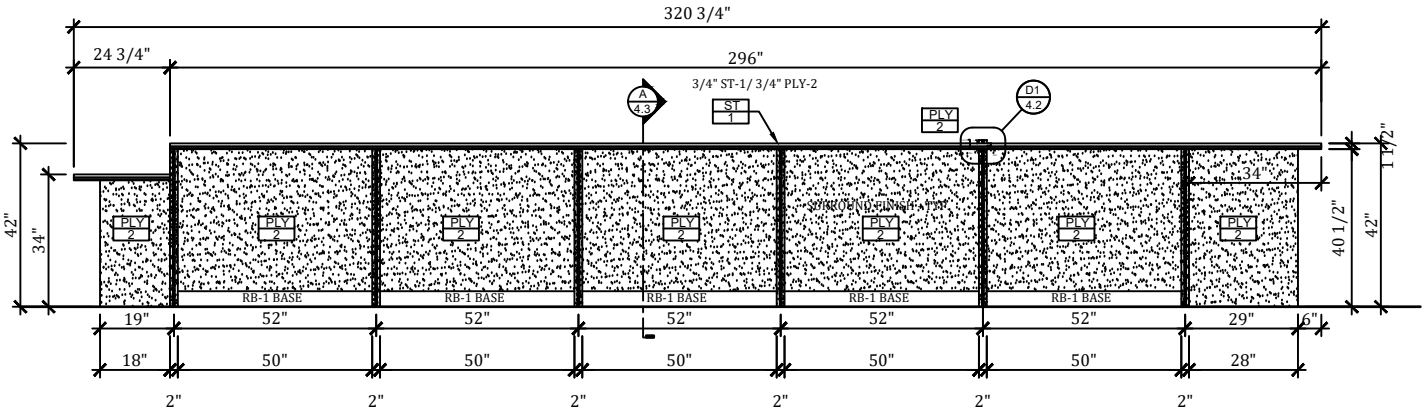

1 ELEVATION
SCALE:1/4" = 1'-00"

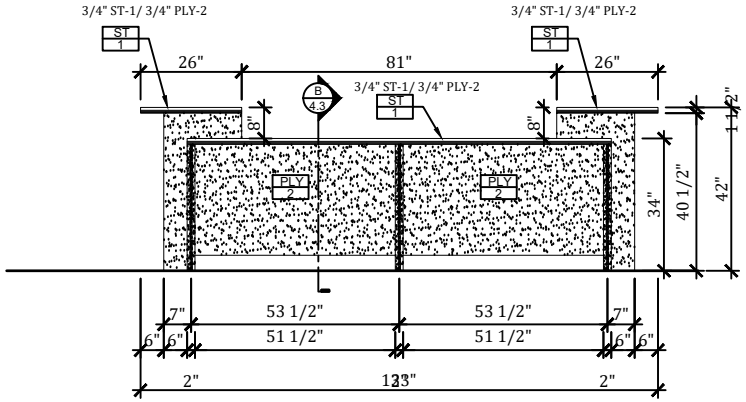

2 ELEVATION
SCALE:1/4" = 1'-00"

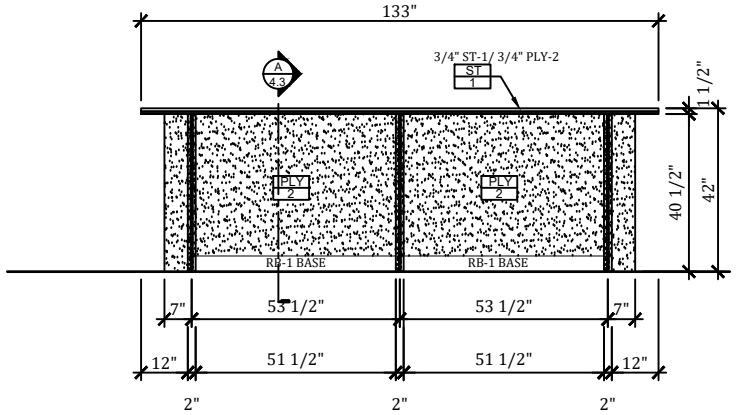

3 ELEVATION
SCALE:1/4" = 1'-00"

EXTERIOR PICKETS

FOR REFERENCE ONLY

NOT FOR FABRICATION

THESE DRAWINGS REPRESENT DESIGN INTENT ONLY AND DO NOT INCLUDE VERIFICATION OF ANY STRUCTURAL, MECHANICAL, ELECTRICAL, OR PLUMBING ELEMENTS. ALL DIMENSIONS AND CONDITIONS MUST BE VERIFIED WITH THE FIELD AND AVAILABLE INFORMATION AND SHALL BE VERIFIED AND APPROVED BY ALL PROFESSIONAL ENGINEERS, CONSULTANTS, AND VENDORS TO ENSURE COMPLIANCE WITH APPLICABLE CODES, REGULATIONS, ENGINEERING, CALCULATIONS, AND OTHER PROFESSIONAL DISCIPLINES.
THIS DRAWING IS PROPERTY OF MILLWORK CONCEPTS, INC. AND MUST BE RETURNED UPON REQUEST. ANY USE OF INFORMATION CONTAINED HEREIN FOR THIRD PARTIES IS PROHIBITED. ANY USE OF THIS DRAWING OTHER THAN FOR BIDDING OR CONSTRUCTION PURPOSES MUST BE AUTHORIZED IN WRITING.

No.	REVISION	DATE
1	REVISION	00-00-00

MCI
Millwork Concepts, Inc.
12345 Front Street, Norwalk, CA 90650
Ph. 565-355-7272, Fax 562-406-8888
Alfredo Castillo

APROVED BY :

DATE:

PITFIRE ARTISAN PIZZA
PITFIRE PIZZA
CARLSBAD
7720 EL CAMINO REAL, CARLSBAD
CALIFORNIA 92009

ARCHITECT: CONQUEST ARCHITECTURE
CONTRACTOR: -
DRAW BY ALGUTVER
PROJ. MGR. ALFREDO CASTILLO
SCALE: AS NOTED
DATE: 06-22-2023
SHEET MW-4.1

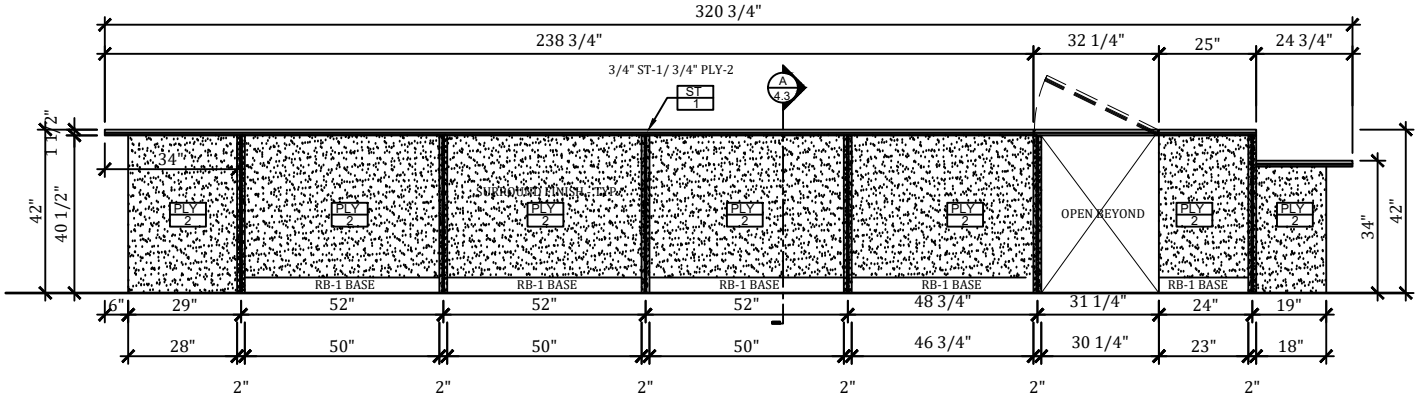

4 ELEVATION
SCALE:1/4" = 1'-00"

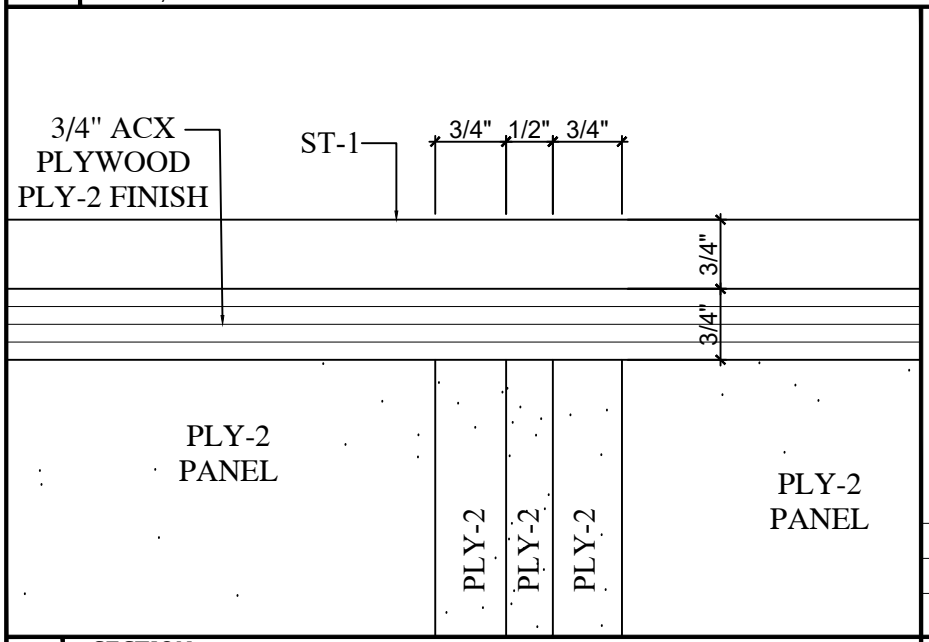

D1 SECTION
SCALE:1/4" = 1'-00"

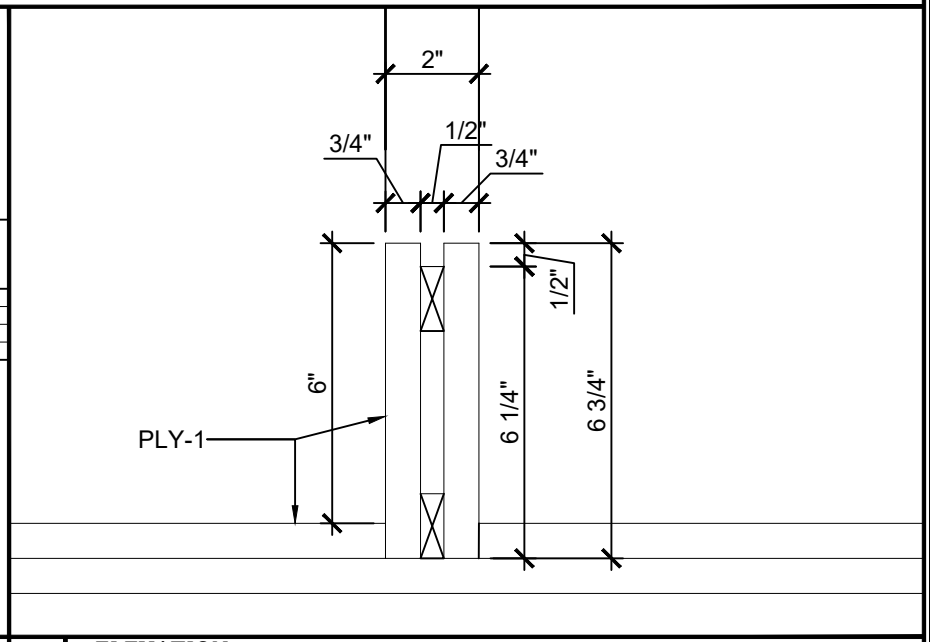

D2 ELEVATION
SCALE:1/4" = 1'-00"

EXTERIOR PICKETS

FOR REFERENCE ONLY

NOT FOR FABRICATION

THESE DRAWINGS REPRESENT DESIGN INTENT ONLY AND DO NOT INCLUDE VERIFICATION OF ANY STRUCTURAL, MECHANICAL, ELECTRICAL, OR PLUMBING SYSTEMS OR ELEMENTS. THE INFORMATION SHOWN ON THESE DRAWINGS MUST BE VERIFIED AND ARE ALSO SUBJECT TO ALL LAWS, CODES, REGULATIONS, ENGINEERING, CALCULATIONS, AND AVAILABLE INFORMATION AND SHALL BE VERIFIED AND APPROVED BY ALL APPLICABLE AUTHORITIES HAVING JURISDICTION. ALL PRODUCTS SHOWN MUST BE INSTALLED WITH APPLICABLE CODES, REGULATIONS, ENGINEERING, CALCULATIONS, AND AVAILABLE INFORMATION.
THIS DRAWING IS PROPERTY OF MILLWORK CONCEPTS, INC. AND MUST BE RETURNED UPON REQUEST. ANY USE OF INFORMATION CONTAINED HEREIN FOR ANY PURPOSE OTHER THAN THAT INTENDED BY MILLWORK CONCEPTS, INC. IS NOT TO BE AUTHORIZED IN WRITING.

No.	REVISION	DATE
1	REVISION	00-00-00

MCI
Millwork Concepts, Inc.
12345 Front Street, Norwalk, CA 90650
Ph. 565-355-7272, Fax 562-406-8888
Alfredo Castillo

APROVED BY :

DATE:

PITFIRE ARTISAN PIZZA
PITFIRE PIZZA
CARLSBAD
7720 EL CAMINO REAL CARLSBAD
CALIFORNIA 92009

ARCHITECT: CONQUEST ARCHITECTURE
CONTRACTOR: -
DRAW BY ALGUTVER
PROJ. MGR. ALFREDO CASTILLO
SCALE: AS NOTED
DATE: 06-22-2023
SHEET MW-4.2

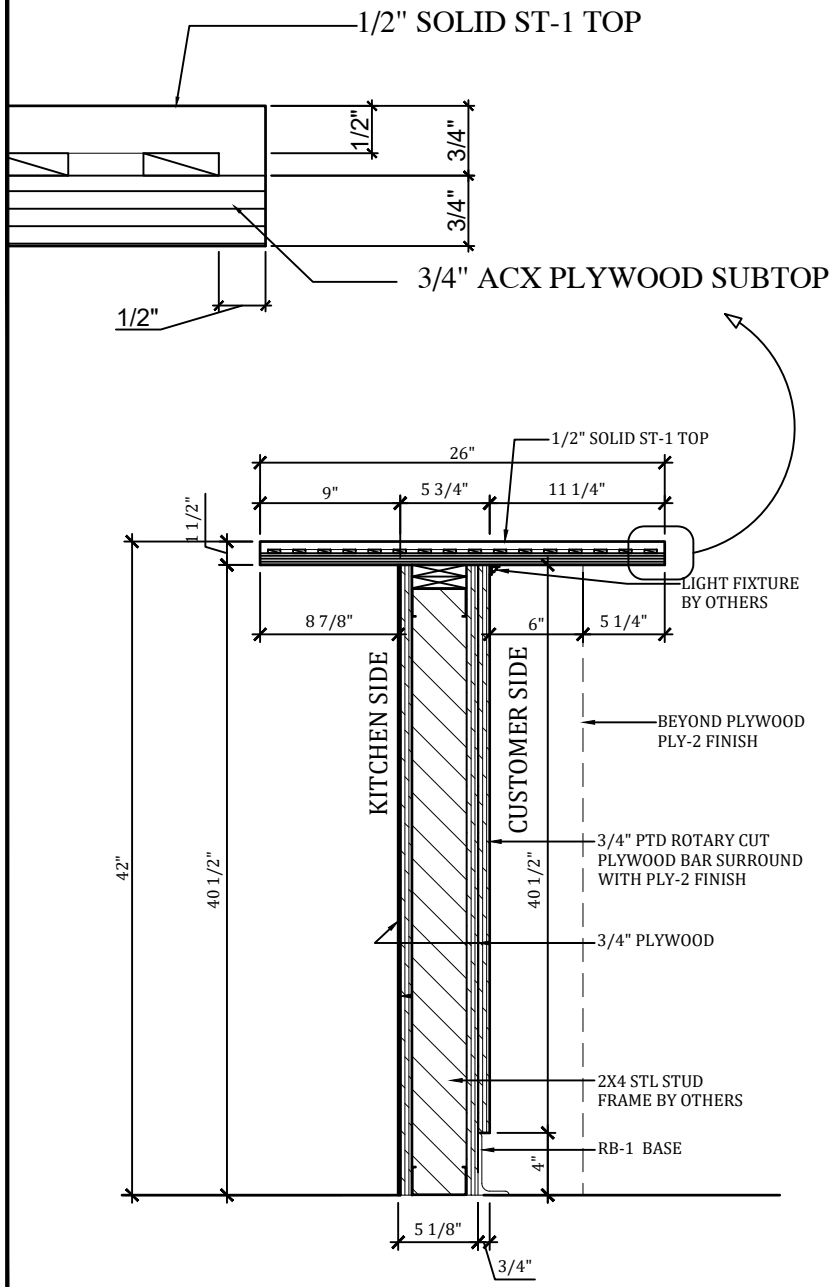

A SECTION
SCALE:1" = 1'-00"

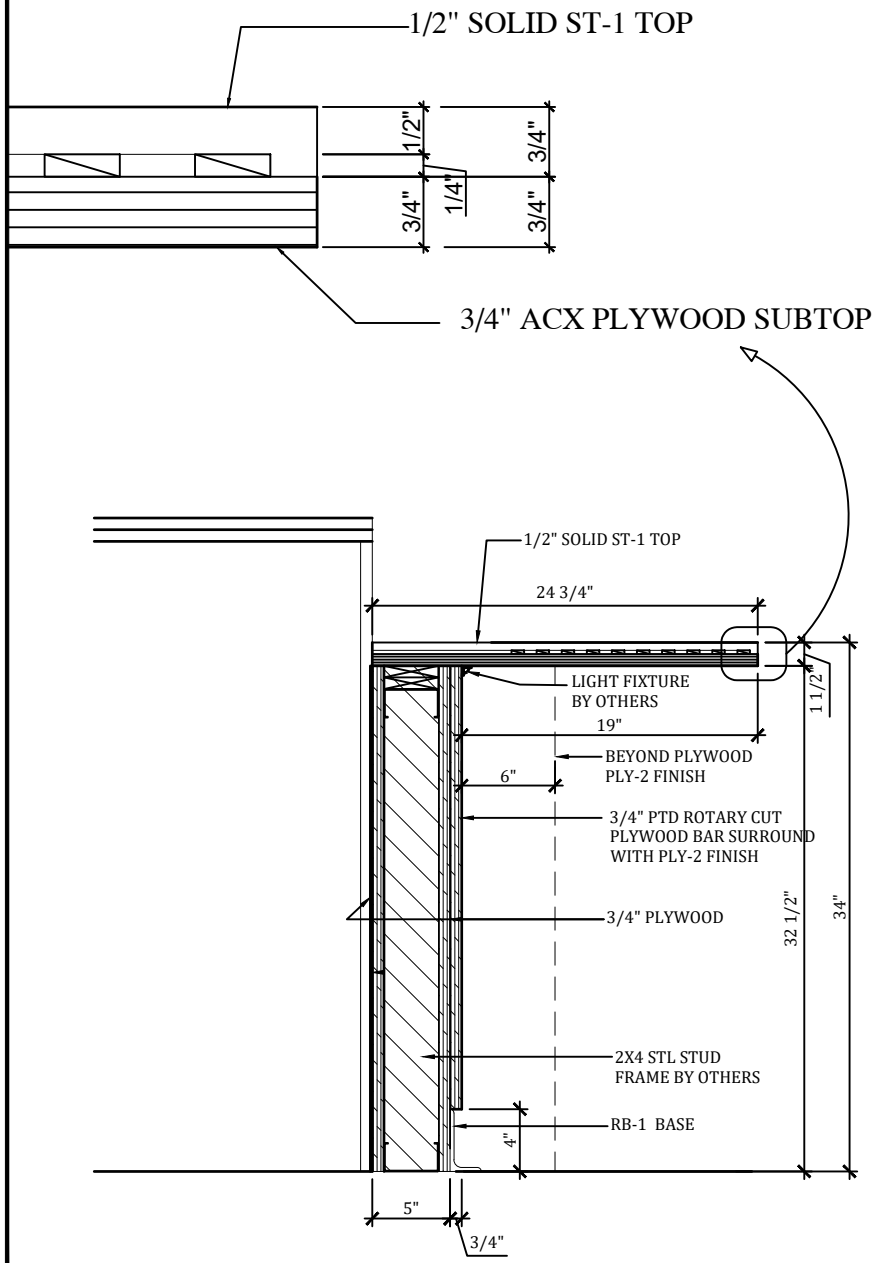

B SECTION
SCALE:1" = 1'-00"

BAR

FOR REFERENCE ONLY

NOT FOR FABRICATION

THESE DRAWINGS REPRESENT DESIGN INTENT ONLY AND DO NOT INCLUDE VERIFICATION OF ANY STRUCTURAL, MECHANICAL, ELECTRICAL, OR PLUMBING FEATURES. THE CONTRACTOR SHALL BE RESPONSIBLE FOR ALL DIMENSIONS AND CONDITIONS AVAILABLE INFORMATION AND SHALL BE VERIFIED AND APPROVED BY ALL AUTHORITIES HAVING JURISDICTION. ALL WORK SHALL BE PERFORMED IN ACCORDANCE WITH APPLICABLE CODES, REGULATIONS, ENGINEERING, CALCULATIONS, AND INDUSTRY STANDARDS AND PRACTICES.
THIS DRAWING IS PROPERTY OF MILLWORK CONCEPTS, INC. AND MUST BE RETURNED UPON REQUEST. ANY USE OF INFORMATION CONTAINED HEREIN FOR ANY OTHER PURPOSE THAN THE PROJECT FOR WHICH IT WAS PREPARED IS NOT TO BE AUTHORIZED IN WRITING.

No.	REVISION	DATE
1	REVISION	00-00-00

MCI
Millwork Concepts, Inc.
12345 Front Street, Norwalk, CA 90650
Ph: 565-355-7272, Fax 562-406-8888
Alfredo Castillo

APROVED BY :

DATE:

PITFIRE ARTISAN PIZZA
PITFIRE PIZZA
CARLSBAD
7720 EL CAMINO REAL CARLSBAD
CALIFORNIA 92009

ARCHITECT: CONQUEST ARCHITECTURE
CONTRACTOR: -
DRAW BY ALGUTVER
PROJ. MGR. ALFREDO CASTILLO
SCALE: AS NOTED
DATE: 06-22-2023
SHEET MW-4.3

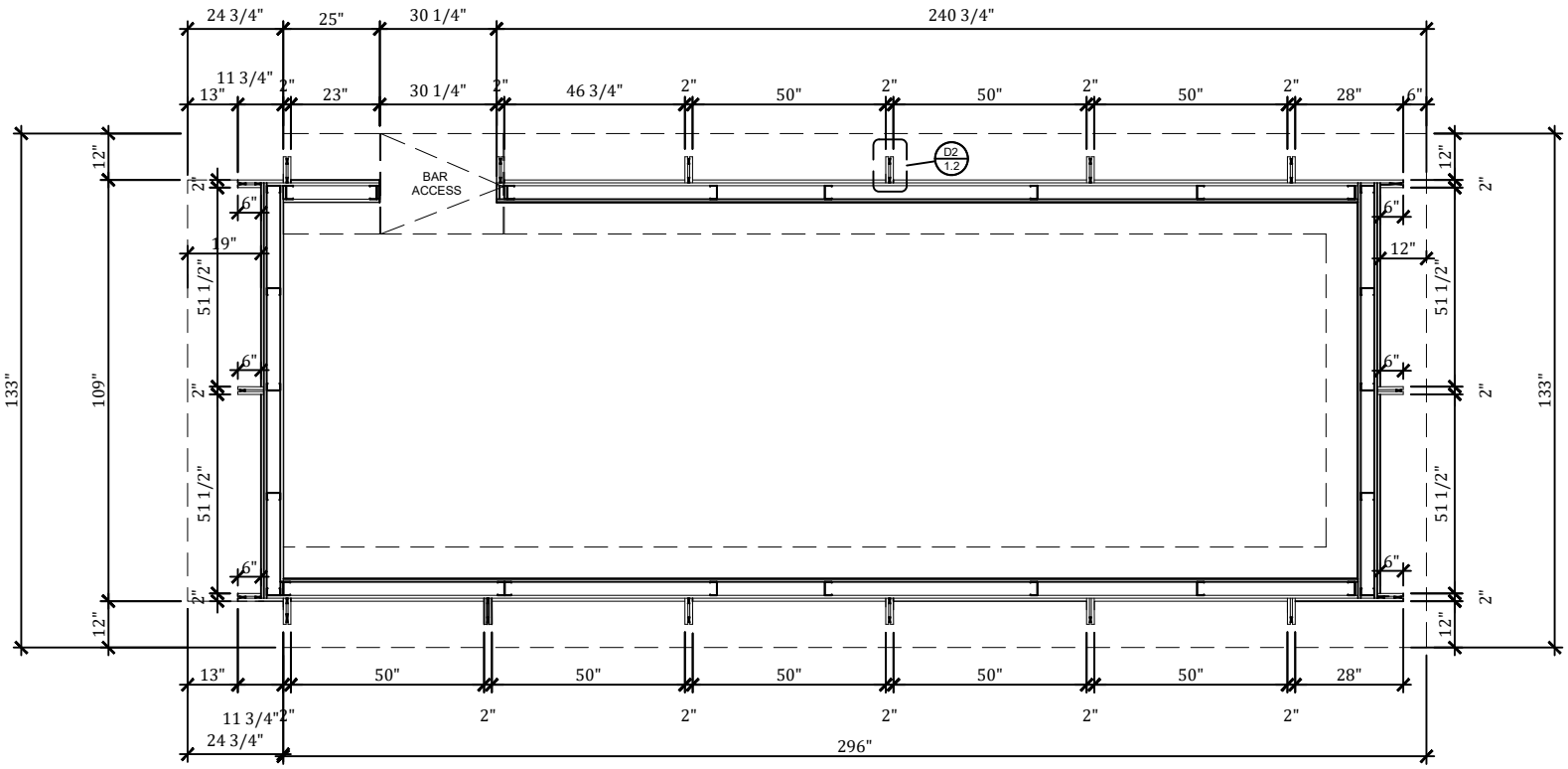

C PLAN SECTION
SCALE:1/4" = 1'-00"

BAR

FOR REFERENCE ONLY

NOT FOR FABRICATION

THESE DRAWINGS REPRESENT DESIGN INTENT ONLY AND DO NOT INCLUDE VERIFICATION OF ANY STRUCTURAL, MECHANICAL, ELECTRICAL, OR PLUMBING FEATURES. CONTRACTORS SHALL VERIFY ALL DIMENSIONS, CONDITIONS, MATERIALS AND ARRANGEMENTS OF MILLWORK CONCEPTS, INC. PRODUCTS COMPONENTS PRIOR TO FABRICATION. ALL OTHER AVAILABLE INFORMATION AND SHALL BE VERIFIED AND APPROVED BY ALL PROFESSIONALS CONTROLLING THE PROJECT. THE PRODUCTS SHOWN HEREIN MUST COMPLY WITH ALL APPLICABLE CODES, REGULATIONS, ENGINEERING, CALCULATIONS, AND PROFESSIONAL CERTIFICATIONS.
THIS DRAWING IS PROPERTY OF MILLWORK CONCEPTS, INC. AND MUST BE RETURNED UPON REQUEST. ANY USE OF INFORMATION CONTAINED HEREIN FOR ANY PURPOSE OTHER THAN THAT INTENDED BY MILLWORK CONCEPTS, INC. IS NOT TO BE AUTHORIZED IN WRITING.

No.	REVISION	DATE
1	REVISION	00-00-00

MCI
Millwork Concepts, Inc.
12345 Front Street, Norwalk, CA 90650
Ph. 565-355-7272, Fax 562-406-8888
Alfredo Castillo

APROVED BY :

DATE:

PITFIRE ARTISAN PIZZA
PITFIRE PIZZA
CARLSBAD
7720 EL CAMINO REAL, CARLSBAD
CALIFORNIA 92009

ARCHITECT: CONQUEST ARCHITECTURE
CONTRACTOR: -
DRAW BY ALGUTVER
PROJ. MGR. ALFREDO CASTILLO
SCALE: AS NOTED
DATE: 06-22-2023
SHEET MW-4.4

MENU SIGNAGE FIN ABOVE (PENDING)

~ PLAN VIEW
SCALE:1/4" = 1'-00"

MENU SIGNAGE FIN ABOVE PENDING

FOR REFERENCE ONLY

NOT FOR FABRICATION

THESE DRAWINGS REPRESENT DESIGN INTENT ONLY AND DO NOT INCLUDE VERIFICATION OF ANY STRUCTURAL, MECHANICAL, ELECTRICAL, OR PLUMBING FEATURES. CONTRACTOR SHALL VERIFY ALL DIMENSIONS, CONDITIONS, MATERIALS AND ARRANGEMENTS OF MILLWORK CONCEPTS, INC. PRODUCTS COMPONENTS FROM AVAILABLE INFORMATION AND SHALL BE VERIFIED AND APPROVED BY ALL REGULATORY AUTHORITIES. CONTRACTOR SHALL INSURE THAT ALL WORK IS WITH APPLICABLE CODES, REGULATIONS, ENGINEERING, CALCULATIONS, AND PROFESSIONAL CONTROL.
THIS DRAWING IS PROPERTY OF MILLWORK CONCEPTS, INC. AND MUST BE RETURNED UPON REQUEST. ANY USE OF INFORMATION CONTAINED HEREIN FOR ANY PURPOSES OTHER THAN THAT FOR WHICH IT WAS PROVIDED, CONSTITUTES A TORT, BE AUTHORIZED IN WRITING.

No.	REVISION	DATE
1	REVISION	00-00-00

MCI
Millwork Concepts, Inc.
12345 Front Street, Norwalk, CA 90650
Ph. 565-355-7272, Fax 562-406-8888
Alfredo Castillo

APROVED BY :

DATE:

PITFIRE ARTISAN PIZZA
PITFIRE PIZZA
CARLSBAD
7720 EL CAMINO REAL, CARLSBAD
CALIFORNIA 92009

ARCHITECT: CONQUEST ARCHITECTURE
CONTRACTOR: -
DRAW BY ALGUTVER
PROJ. MGR. ALFREDO CASTILLO
SCALE: AS NOTED
DATE: 06-22-2023
SHEET MW-5

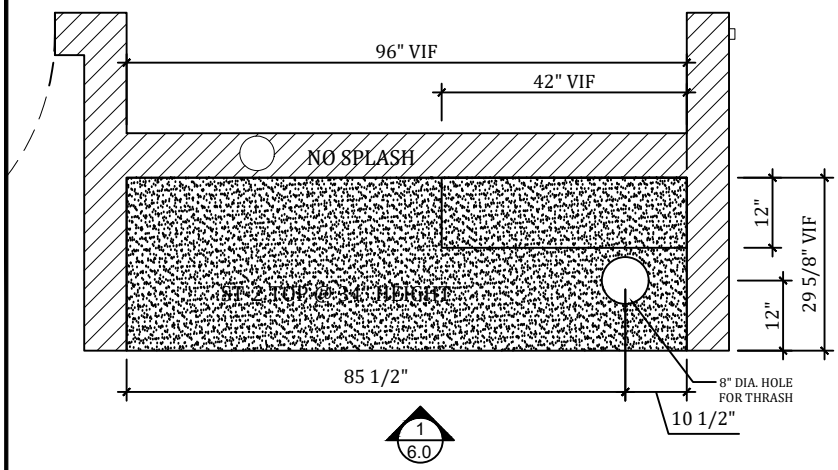

~ PLAN VIEW
SCALE:3/8" = 1'-00"

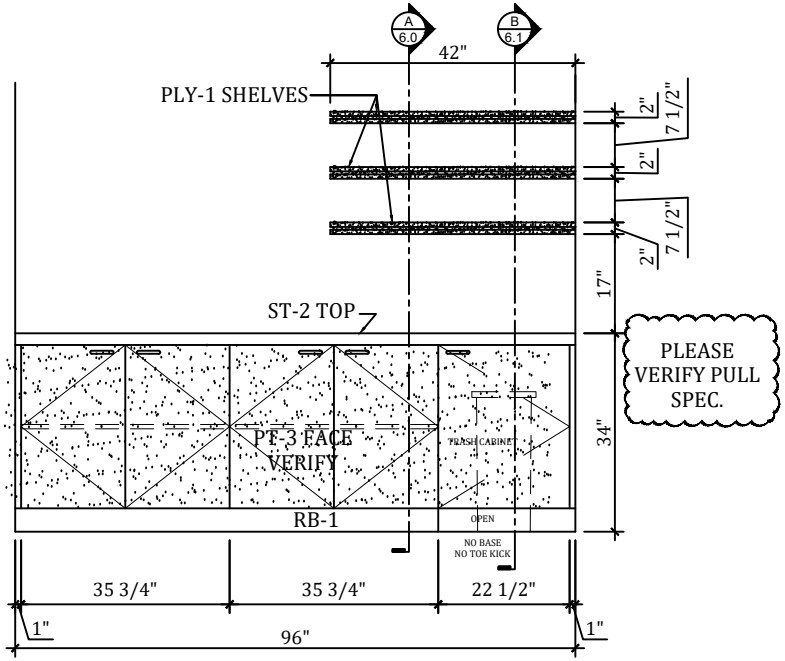

1 ELEVATION
SCALE: 3/8" = 1'-00"

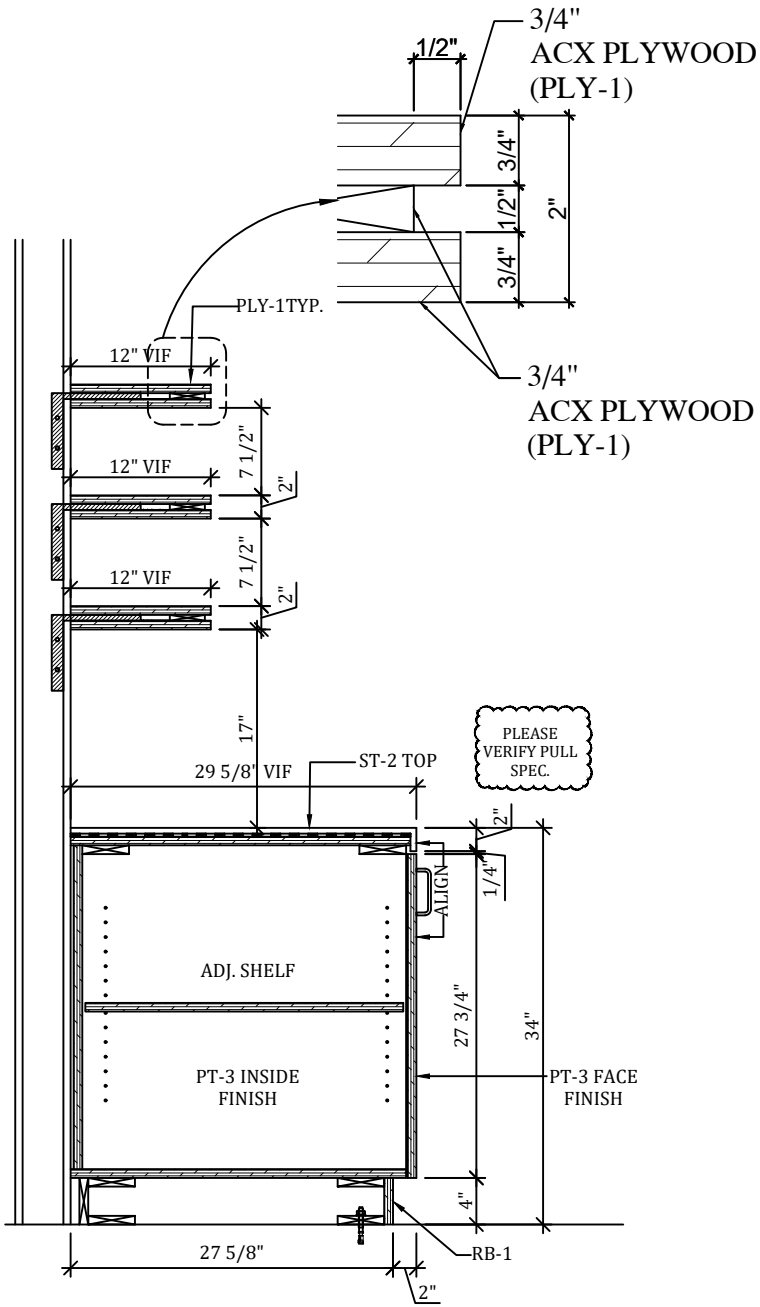

A SECTION
SCALE:1" = 1'-00"

BEVERAGE STATION

FOR REFERENCE ONLY

NOT FOR FABRICATION

THESE DRAWINGS REPRESENT DESIGN INTENT ONLY AND DO NOT INCLUDE VERIFICATION OF ANY STRUCTURAL, MECHANICAL, ELECTRICAL, OR PLUMBING CONDITIONS. THE CONTRACTOR SHALL BE RESPONSIBLE FOR THE ACCURACY OF THE AND ARRANGEMENTS OF MILLWORK CONCEPTS, INC. PROJECT COMPONENTS FROM AVAILABLE INFORMATION AND SHALL BE VERIFIED AND APPROVED BY ALL PERTINENT PARTIES. CONSTRUCTION SHALL BE PERFORMED IN ACCORDANCE WITH ALL APPLICABLE CODES, REGULATIONS, ENGINEERING, CALCULATIONS, AND STANDARDS OF PRACTICE.
THIS DRAWING IS PROPERTY OF MILLWORK CONCEPTS, INC. AND MUST BE RETURNED UPON REQUEST. ANY USE OF INFORMATION CONTAINED HEREIN FOR ANY PURPOSE OTHER THAN THE ORIGINAL INTENT IS PROHIBITED. NO PART MAY BE AUTHORIZED IN WRITING.

No.	REVISION	DATE
1	REVISION	00-00-00

MCI
Millwork Concepts, Inc.
12345 Front Street, Norwalk, CA 90650
Ph. 565-355-7272, Fax 562-406-8888
Alfredo Castillo

APROVED BY :

DATE:

PITFIRE ARTISAN PIZZA
PITFIRE PIZZA
CARLSBAD
7720 EL CAMINO REAL CARLSBAD
CALIFORNIA 92009

ARCHITECT: CONQUEST ARCHITECTURE
CONTRACTOR: -
DRAW BY ALGUTVER
PROJ. MGR. ALFREDO CASTILLO
SCALE: AS NOTED
DATE: 06-22-2023
SHEET MW-6

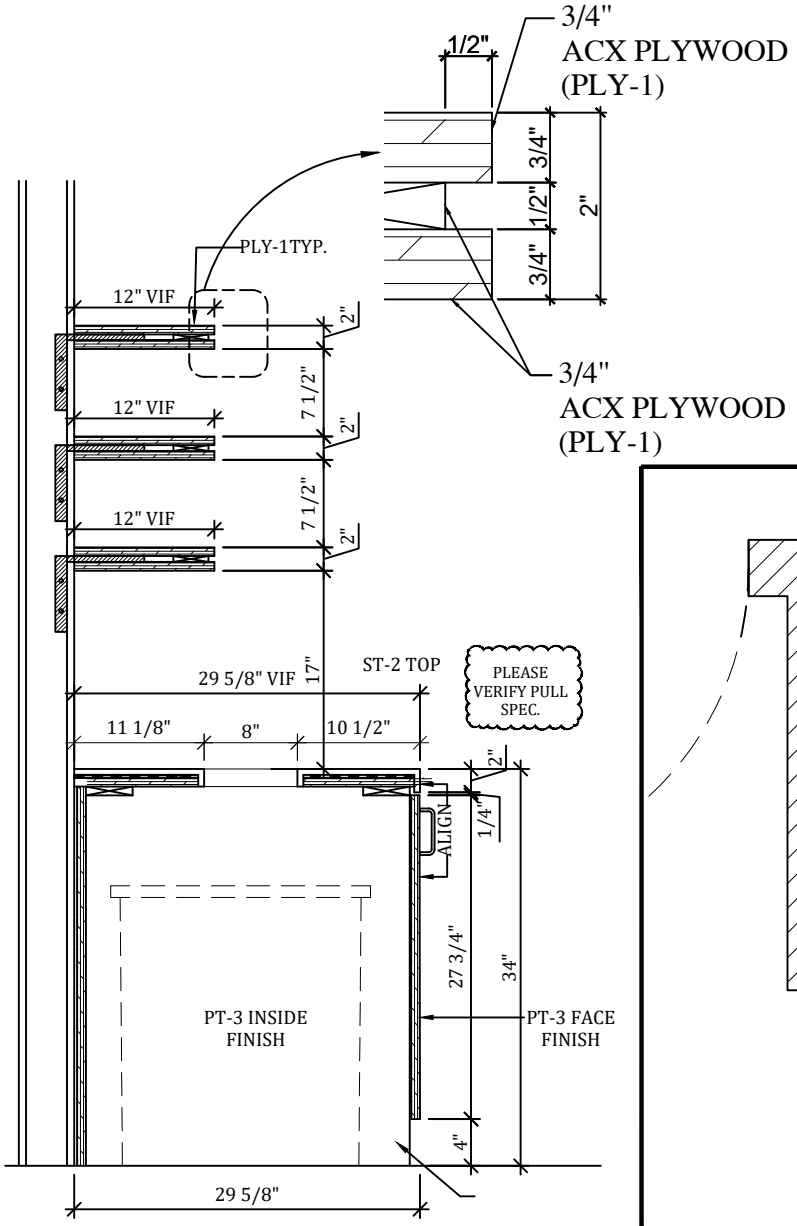

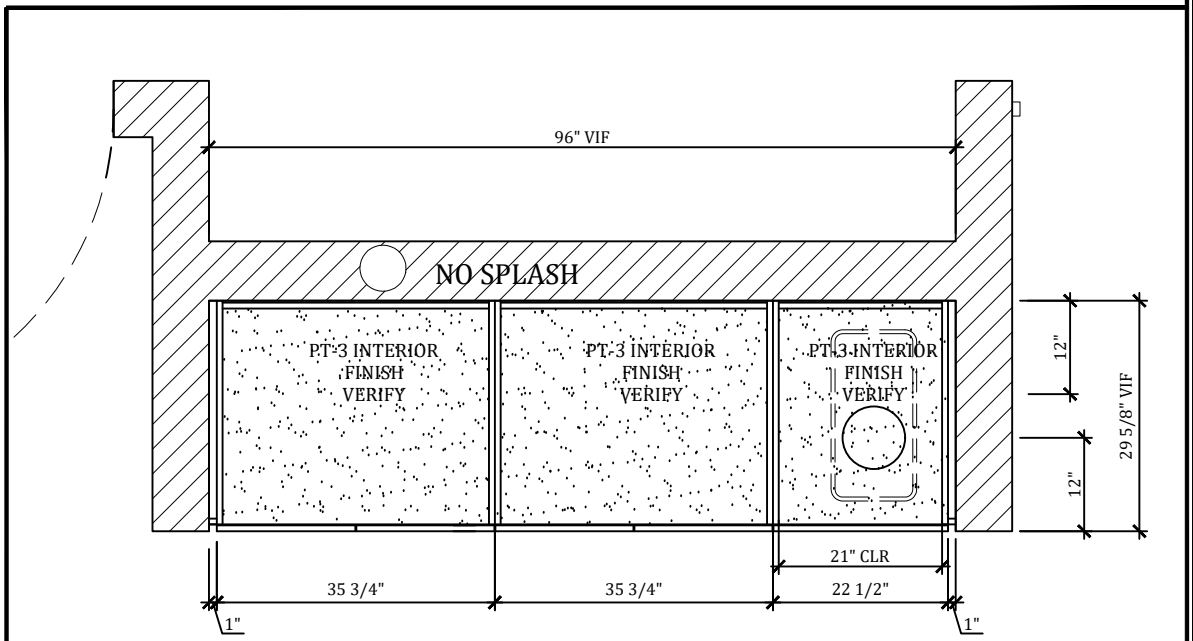

B PLAN SECTION
SCALE:3/4" = 1'-00"

C PLAN SECTION
SCALE:1/2" = 1'-00"

BEVERAGE STATION

FOR REFERENCE ONLY

NOT FOR FABRICATION

THESE DRAWINGS REPRESENT DESIGN INTENT ONLY AND DO NOT INCLUDE VERIFICATION OF ANY STRUCTURAL, MECHANICAL, ELECTRICAL, OR PLUMBING. THE CONTRACTOR IS RESPONSIBLE FOR VERIFYING THE ACCURACY OF THE DESIGN AND ARRANGEMENTS OF MILLWORK CONCEPTS, INC. PROJECT COMPONENTS FROM AVAILABLE INFORMATION AND SHALL BE VERIFIED AND APPROVED BY ALL PROFESSIONALS CONTROLLING THE PROJECT. THE PROJECT MUST COMPLY WITH APPLICABLE CODES, REGULATIONS, ENGINEERING, CALCULATIONS, AND PROFESSIONAL CONTROLS.
THIS DRAWING IS PROPERTY OF MILLWORK CONCEPTS, INC. AND MUST BE RETURNED UPON REQUEST. ANY USE OF INFORMATION CONTAINED HEREIN FOR SITE PREPARATION AND CONSTRUCTION PURPOSES OTHER THAN PRODUCTION OF THIS PROJECT IS NOT AUTHORIZED IN WRITING.

No.	REVISION	DATE
1	REVISION	00-00-00

MCI
Millwork Concepts, Inc.
12345 Front Street, Norwalk, CA 90650
Ph. 565-355-7272, Fax 562-406-8888
Alfredo Castillo

APROVED BY :

DATE:

PITFIRE ARTISAN PIZZA
PITFIRE PIZZA
CARLSBAD
7720 EL CAMINO REAL, CARLSBAD
CALIFORNIA 92009

ARCHITECT: CONQUEST ARCHITECTURE
CONTRACTOR: -
DRAW BY ALGUTVER
PROJ. MGR. ALFREDO CASTILLO
SCALE: AS NOTED
DATE: 06-22-2023
SHEET MW-6.1

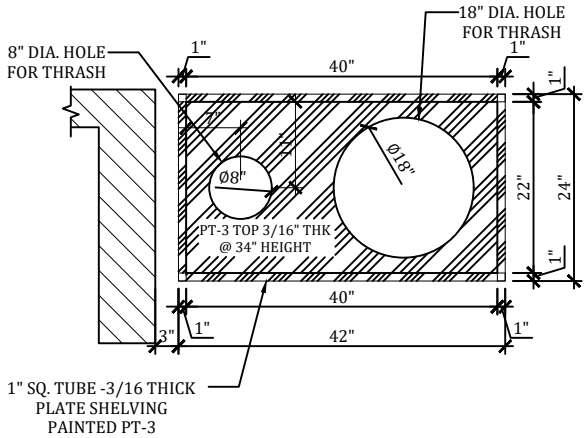

~ PLAN VIEW
SCALE:3/8" = 1'-00"

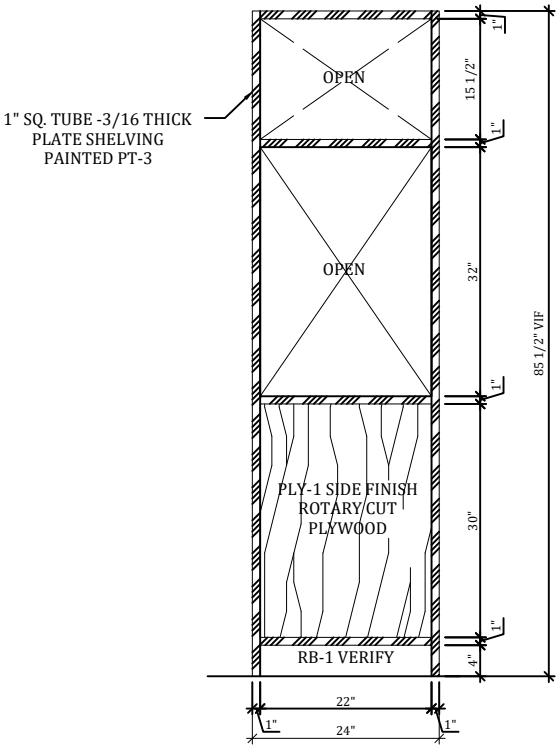

1 ELEVATION
SCALE: 1/2" = 1'-00"

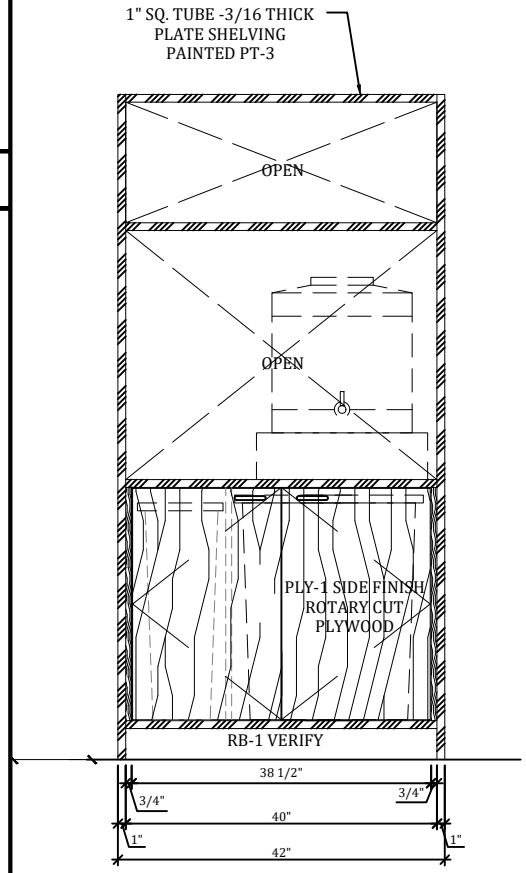

2 ELEVATION
SCALE:1/2" = 1'-00"

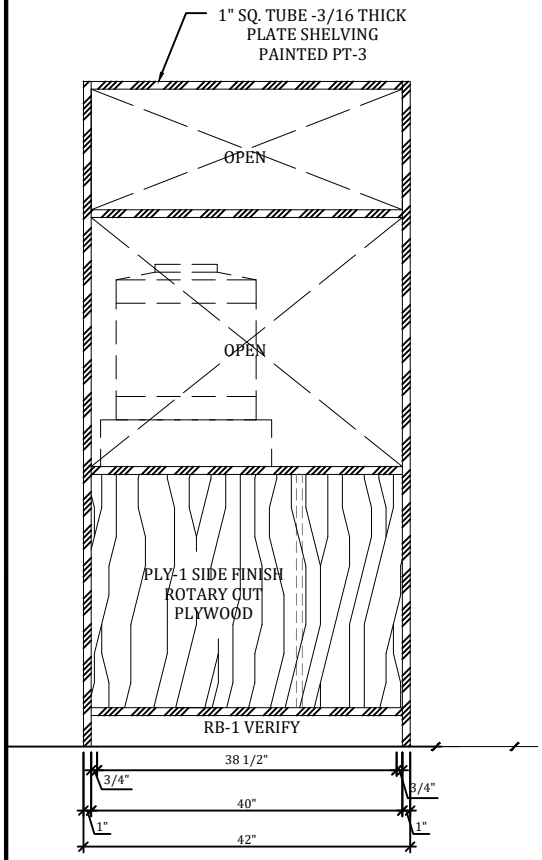

3 ELEVATION
SCALE:1/2" = 1'-00"

SERVICE/BUS STATION INSIDE

FOR REFERENCE ONLY

NOT FOR FABRICATION

THESE DRAWINGS REPRESENT DESIGN INTENT ONLY AND DO NOT INCLUDE VERIFICATION OF ANY STRUCTURAL, MECHANICAL, ELECTRICAL OR PLUMBING DESIGN. CONTRACTOR SHALL VERIFY ALL DIMENSIONS, CONDITIONS, MATERIALS AND ARRANGEMENTS OF MILLWORK CONCEPTS, INC. PROJECT COMPONENTS FROM AVAILABLE INFORMATION AND SHALL BE VERIFIED AND APPROVED BY ALL PERTINENT AGENCIES PRIOR TO CONSTRUCTION. ALL WORK SHALL BE INSTALLED WITH APPLICABLE CODES, REGULATIONS, ENGINEERING, CALCULATIONS, AND INDUSTRY STANDARD CONDITIONS.
THIS DRAWING IS PROPERTY OF MILLWORK CONCEPTS, INC. AND MUST BE RETURNED UPON REQUEST. ANY USE OF INFORMATION CONTAINED HEREIN FOR BIDDING PURPOSES ONLY. ANY OTHER USE OR REPRODUCTION IS PROHIBITED AND MUST BE AUTHORIZED IN WRITING.

No.	REVISION	DATE
1	REVISION	00-00-00

MCI
Millwork Concepts, Inc.
12345 Front Street, Norwalk, CA 90650
Ph. 565-355-7272, Fax 562-406-8888
Alfredo Castillo

APROVED BY :

DATE:

PITFIRE ARTISAN PIZZA
PITFIRE PIZZA
CARLSBAD
7720 EL CAMINO REAL, CARLSBAD
CALIFORNIA 92009

ARCHITECT: CONQUEST ARCHITECTURE
CONTRACTOR: -
DRAW BY ALGUTVER
PROJ. MGR. ALFREDO CASTILLO
SCALE: AS NOTED
DATE: 06-22-2023
SHEET MW-7

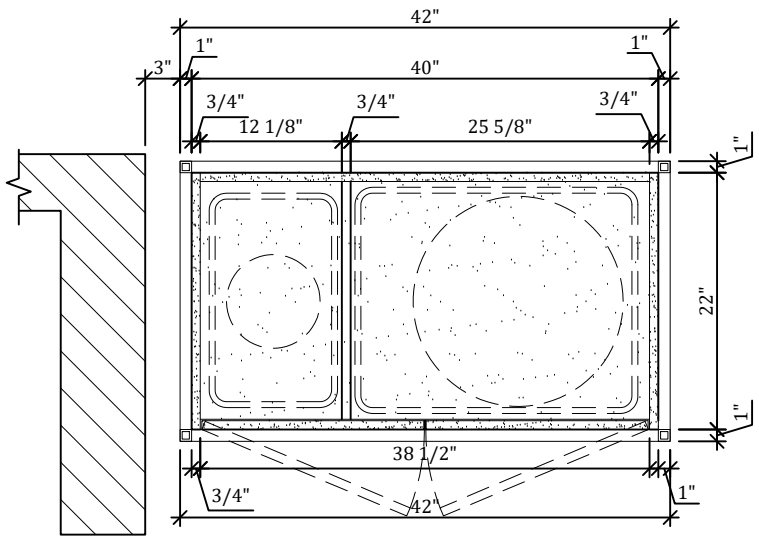

A PLAN SECTION
SCALE: 3/4" = 1'-00"

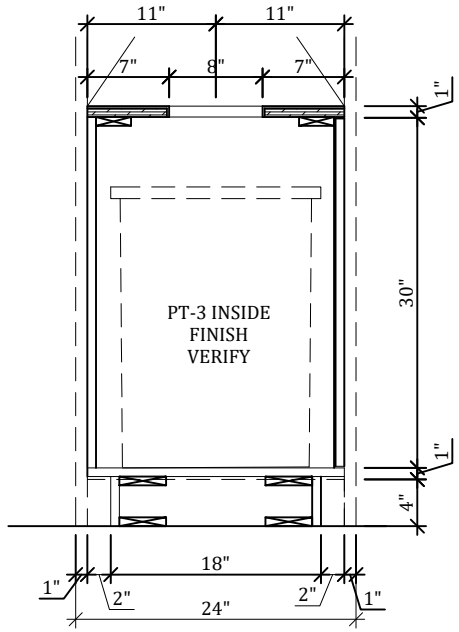

PLY-1 SIDE FINISH
ROTARY CUT
PLYWOOD
ALL EXPOSED SIDE

B SECTION
SCALE: 3/4" = 1'-00"

SERVICE/BUS STATION INSIDE

FOR REFERENCE ONLY

NOT FOR FABRICATION

THESE DRAWINGS REPRESENT DESIGN INTENT ONLY AND DO NOT INCLUDE VERIFICATION OF ANY STRUCTURAL, MECHANICAL, ELECTRICAL, OR PLUMBING FEATURES. CONSTRUCTION MUST COMPLY WITH ALL APPLICABLE CODES, REGULATIONS, AND ORDINANCES. THE CONTRACTOR SHALL BE RESPONSIBLE FOR ALL DIMENSIONS AND CONDITIONS. ANY DISCREPANCIES SHOULD BE REPORTED TO MILLWORK CONCEPTS, INC. PRIOR TO CONSTRUCTION. ALL DRAWINGS AND ARRANGEMENTS OF MILLWORK CONCEPTS, INC. PRODUCTS COMPONENTS PROVIDED ARE BASED ON INFORMATION AVAILABLE AT THE TIME OF PRODUCTION. ALL DIMENSIONS SHOULD BE VERIFIED AND APPROVED BY ALL PARTIES PRIOR TO PRODUCTION. ALL PRODUCTS COMPONENTS PROVIDED ARE BASED ON AVAILABLE INFORMATION AND SHALL

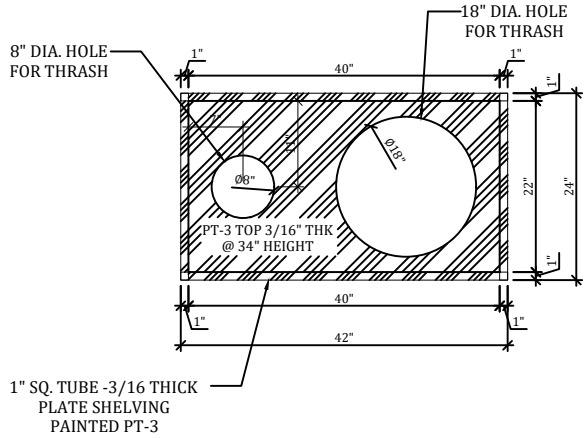

~ PLAN VIEW
SCALE:3/8" = 1'-00"

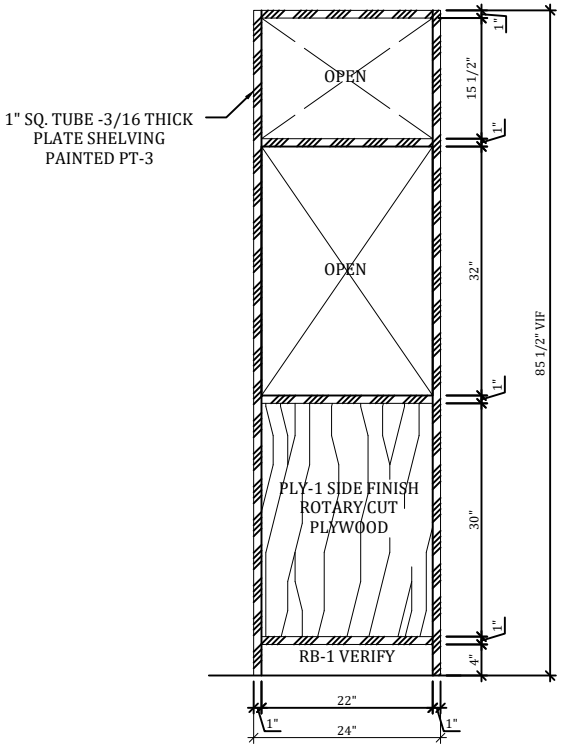

1 ELEVATION
SCALE: 1/2" = 1'-00"

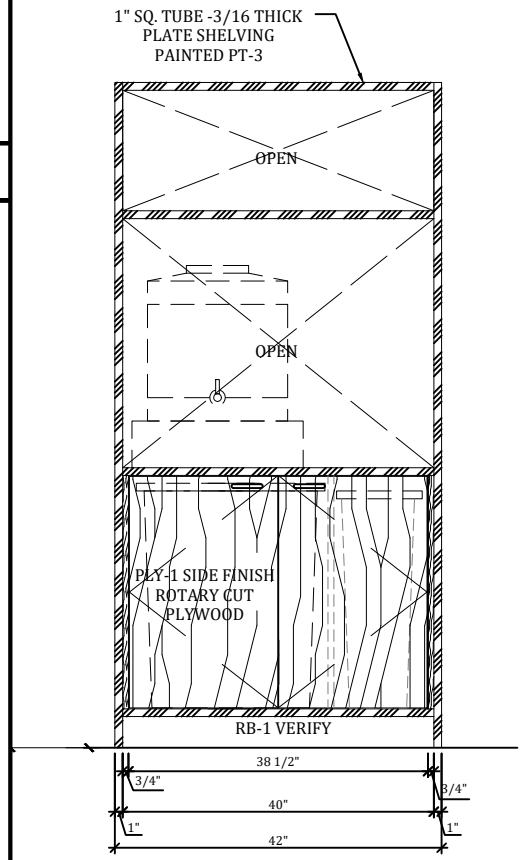

2 ELEVATION
SCALE: 1/2" = 1'-00"

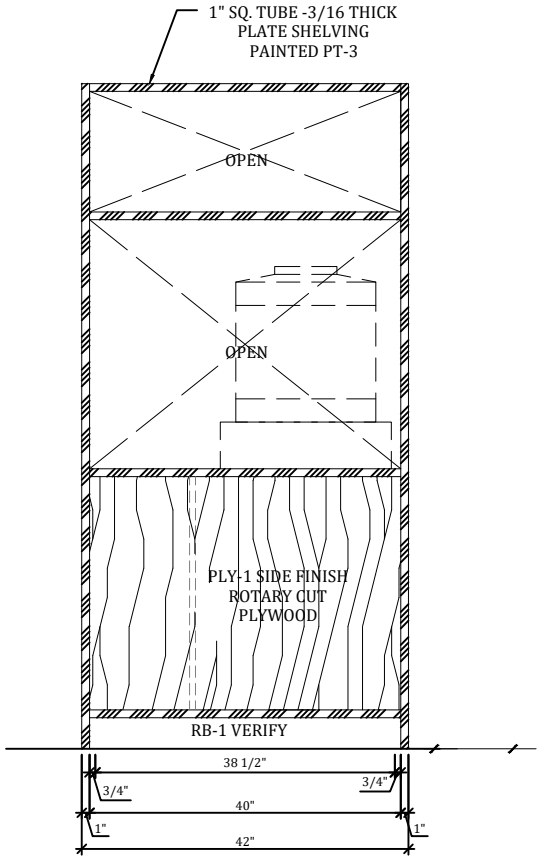

3 ELEVATION
SCALE: 1/2" = 1'-00"

SERVICE/BUS STATION PATIO

FOR REFERENCE ONLY

NOT FOR FABRICATION

THESE DRAWINGS REPRESENT DESIGN INTENT ONLY AND DO NOT INCLUDE VERIFICATION OF ANY STRUCTURAL, MECHANICAL, ELECTRICAL, OR PLUMBING DESIGN. ALL CONSTRUCTION DOCUMENTS MUST BE PREPARED BY LICENSED PROFESSIONALS AND ARE ELEMENTS OF MILLWORK CONCEPTS, INC. PROJECT COMPONENTS PROVIDED. AVAILABLE INFORMATION AND SHALL BE VERIFIED AND APPROVED BY ALL PROFESSIONALS CONTRACTED TO PROVIDE THE PROJECT. ALL DESIGNS MUST COMPLY WITH APPLICABLE CODES, REGULATIONS, ENGINEERING, CALCULATIONS, AND PROFESSIONAL CONTRACTS.
THIS DRAWING IS PROPERTY OF MILLWORK CONCEPTS, INC. AND MUST BE RETURNED UPON REQUEST. ANY USE OF INFORMATION CONTAINED HEREIN FOR ANY PURPOSE OTHER THAN THE PROJECT FOR WHICH IT WAS PREPARED MUST BE AUTHORIZED IN WRITING.

No.	REVISION	DATE
1	REVISION	00-00-00

MCI
Millwork Concepts, Inc.
12345 Front Street, Norwalk, CA 90650
Ph.: 565-355-7272, Fax 562-406-8888
Alfredo Castillo

APROVED BY :

DATE:

PITFIRE ARTISAN PIZZA
PITFIRE PIZZA
CARLSBAD
7720 EL CAMINO REAL, CARLSBAD
CALIFORNIA 92009

ARCHITECT: CONQUEST ARCHITECTURE
CONTRACTOR: -
DRAW BY ALGUTVER
PROJ. MGR. ALFREDO CASTILLO
SCALE: AS NOTED
DATE: 06-22-2023
SHEET MW-7 A

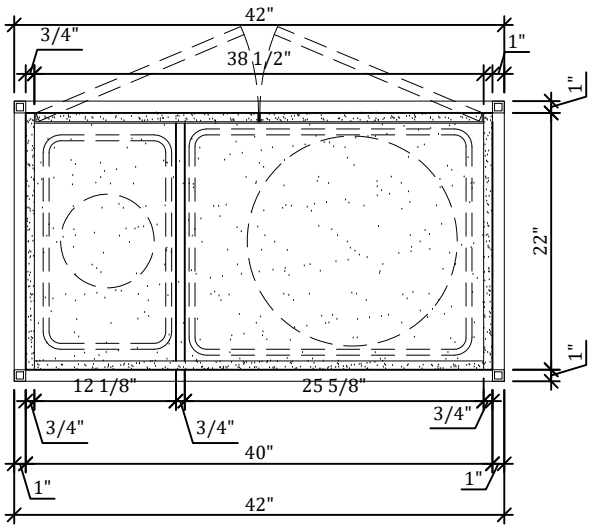

A PLAN SECTION
SCALE: 3/4" = 1'-00"

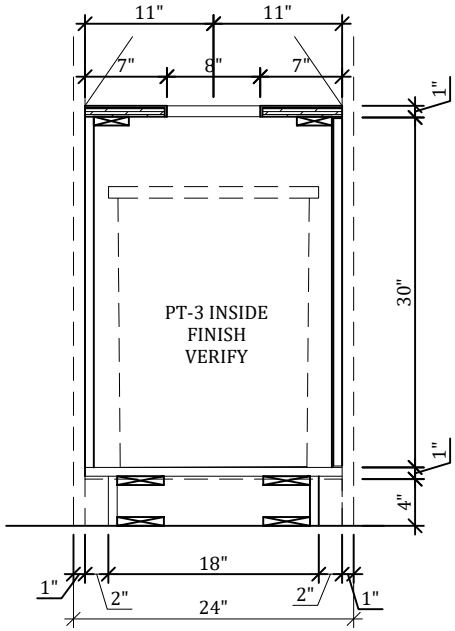

PLY-1 SIDE FINISH
ROTARY CUT
PLYWOOD
ALL EXPOSED SIDE

B SECTION
SCALE: 3/4" = 1'-00"

SERVICE/BUS STATION PATIO

FOR REFERENCE ONLY

NOT FOR FABRICATION

THESE DRAWINGS REPRESENT DESIGN INTENT ONLY AND DO NOT INCLUDE VERIFICATION OF ANY STRUCTURAL, MECHANICAL, ELECTRICAL, OR PLUMBING FEATURES. CONTRACTOR SHALL VERIFY ALL DIMENSIONS, CONDITIONS, MATERIALS AND ARRANGEMENTS OF MILLWORK CONCEPTS, INC. PRODUCTS COMPONENTS FROM AVAILABLE INFORMATION AND SHALL BE VERIFIED AND APPROVED BY ALL PROFESSIONALS CONTROLLING THE WORK. ALL WORK SHALL BE PERFORMED WITH APPLICABLE CODES, REGULATIONS, ENGINEERING, CALCULATIONS, AND INDUSTRY STANDARD PRACTICES.
THIS DRAWING IS PROPERTY OF MILLWORK CONCEPTS, INC. AND MUST BE RETURNED UPON REQUEST. ANY USE OF INFORMATION CONTAINED HEREIN FOR ANY OTHER PURPOSE WITHOUT WRITTEN PERMISSION OF MILLWORK CONCEPTS, INC. IS NOT AUTHORIZED IN WRITING.

No.	REVISION	DATE
1	REVISION	00-00-00

MCI
Millwork Concepts, Inc.
12345 Front Street, Norwalk, CA 90650
Ph. 565-355-7272, Fax 562-406-8888
Alfredo Castillo

APROVED BY :

DATE:

PITFIRE ARTISAN PIZZA
PITFIRE PIZZA
CARLSBAD
7720 EL CAMINO REAL, CARLSBAD
CALIFORNIA 92009

ARCHITECT: CONQUEST ARCHITECTURE
CONTRACTOR: -
DRAW BY ALGUTVER
PROJ. MGR. ALFREDO CASTILLO
SCALE: AS NOTED
DATE: 06-22-2023
SHEET: MW-7.1A

MENU SIGNAGE FIN ABOVE (PENDING)

~ PLAN VIEW
SCALE:1/4" = 1'-00"

NOT USED AT THIS TIME

FOR REFERENCE ONLY

NOT FOR FABRICATION

THESE DRAWINGS REPRESENT DESIGN INTENT ONLY AND DO NOT INCLUDE VERIFICATION OF ANY STRUCTURAL, MECHANICAL, ELECTRICAL, OR PLUMBING REQUIREMENTS. THE CONTRACTOR IS TO VERIFY ALL DIMENSIONS, CONDITIONS AND ARRANGEMENTS OF MILLWORK CONCEPTS, INC. PRODUCTS COMPONENTS FROM AVAILABLE INFORMATION AND SHALL BE VERIFIED AND APPROVED BY ALL REGULATORY AGENCIES HAVING JURISDICTION. ALL PRODUCTS TO BE INSTALLED WITH APPLICABLE CODES, REGULATIONS, ENGINEERING, CALCULATIONS, AND INDUSTRY STANDARD PRACTICES.
THIS DRAWING IS PROPERTY OF MILLWORK CONCEPTS, INC. AND MUST BE RETURNED UPON REQUEST. ANY USE OF INFORMATION CONTAINED HEREIN FOR ANY PURPOSE OTHER THAN THAT FOR WHICH IT WAS INTENDED, IS NOT TO BE AUTHORIZED IN WRITING.

No.	REVISION	DATE
1	REVISION	00-00-00

MCI
Millwork Concepts, Inc.
12345 Front Street, Norwalk, CA 90650
Ph. 565-355-7272, Fax 562-406-8888
Alfredo Castillo

APROVED BY :

DATE:

PITFIRE ARTISAN PIZZA
PITFIRE PIZZA
CARLSBAD
7720 EL CAMINO REAL CARLSBAD
CALIFORNIA 92009

ARCHITECT: CONQUEST ARCHITECTURE
CONTRACTOR: -
DRAW BY ALGUTVER
PROJ. MGR. ALFREDO CASTILLO
SCALE: AS NOTED
DATE: 06-22-2023
SHEET: MW-8 - 9

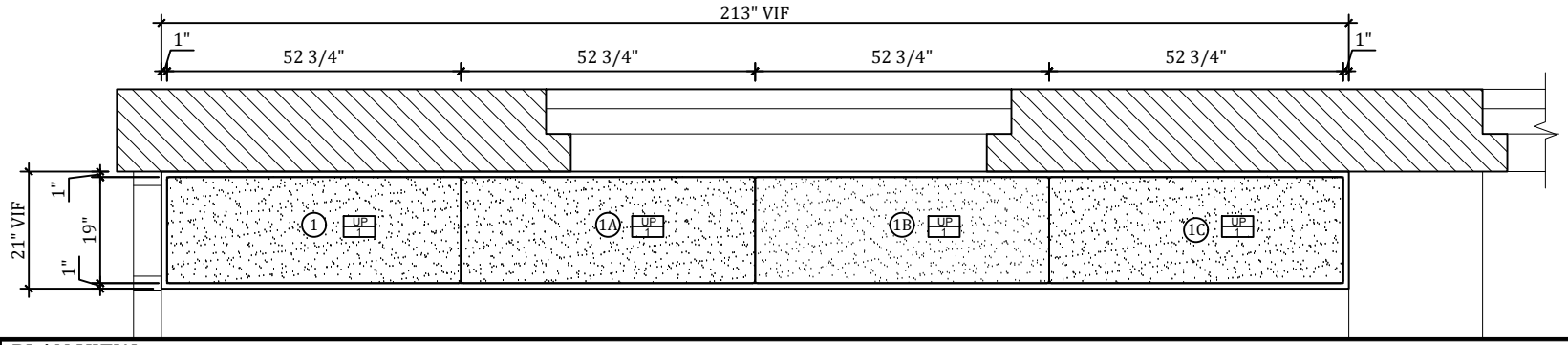

~ PLAN VIEW
SCALE:1/4" = 1'-00"

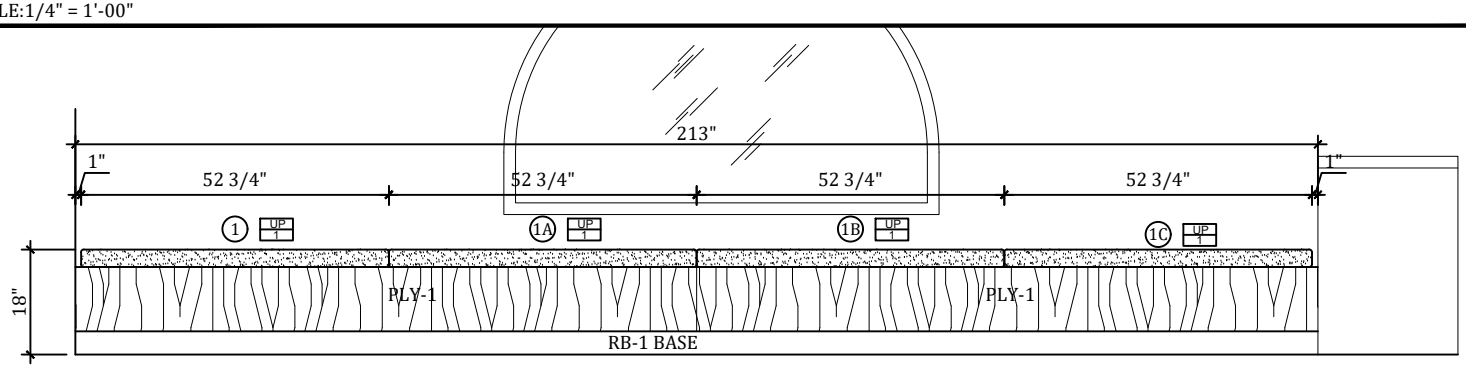

~ PLAN VIEW
SCALE:1/4" = 1'-00"

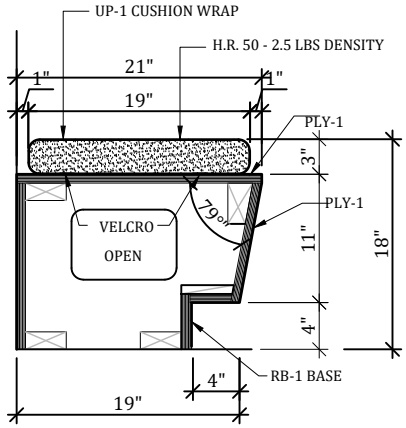

~ PLAN VIEW
SCALE:1/4" = 1'-00"

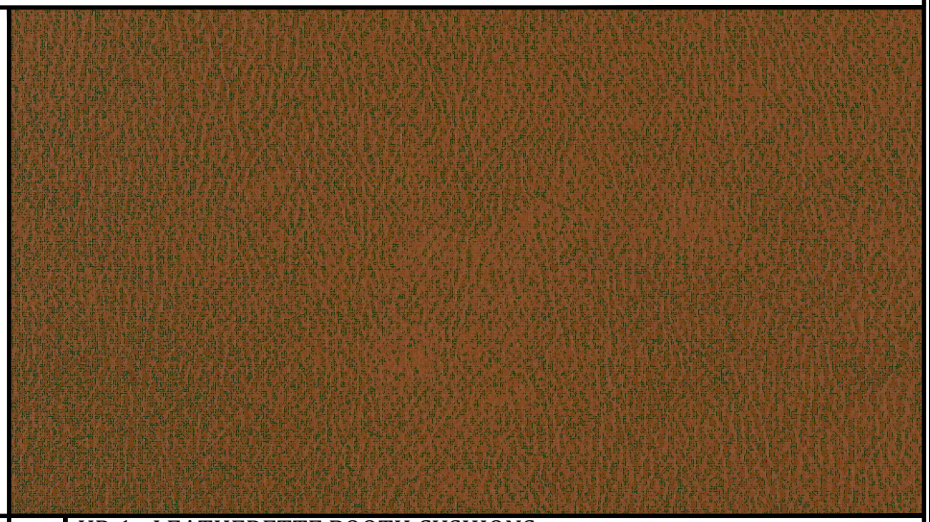

~ UP-1 - LEATHERETTE BOOTH CUSHIONS
ARC COM - BRONCO -AC61691 PERSSIMON # 121

BANQUETTE SEATING

FOR REFERENCE ONLY

NOT FOR FABRICATION

THESE DRAWINGS REPRESENT DESIGN INTENT ONLY AND DO NOT INCLUDE VERIFICATION OF ANY STRUCTURAL, MECHANICAL, ELECTRICAL, OR PLUMBING SYSTEMS. THE CONTRACTOR SHALL BE RESPONSIBLE FOR ALL DIMENSIONS AND CONDITIONS AVAILABLE INFORMATION AND SHALL BE VERIFIED AND APPROVED BY ALL PERTINENT AUTHORITIES PRIOR TO THE FABRICATION OF ANY MATERIALS, WORK MUST BE WITH APPLICABLE CODES, REGULATIONS, ENGINEERING, CALCULATIONS, AND SPECIFICATIONS OF THE PROJECT.
THIS DRAWING IS COPYRIGHTED © MILLWORK CONCEPTS, INC. AND MUST BE RETURNED UPON REQUEST. ANY USE OF INFORMATION CONTAINED HEREIN FOR OTHER THAN THE PROJECT FOR WHICH IT WAS PREPARED, CONSTITUTES A TORT AND MUST BE AUTHORIZED IN WRITING.

No.	REVISION	DATE
1	REVISION	00-00-00

MCI
Millwork Concepts, Inc.
12345 Front Street, Norwalk, CA 90650
Ph. 565-355-7272, Fax 562-406-8888
Alfredo Castillo

APROVED BY :

DATE:

PITFIRE ARTISAN PIZZA
PITFIRE PIZZA
CARLSBAD
7720 EL CAMINO REAL, CARLSBAD
CALIFORNIA 92009

ARCHITECT: CONQUEST ARCHITECTURE
CONTRACTOR: -
DRAW BY ALGUTVER
PROJ. MGR. ALFREDO CASTILLO
SCALE: AS NOTED
DATE: 06-22-2023
SHEET MW-10

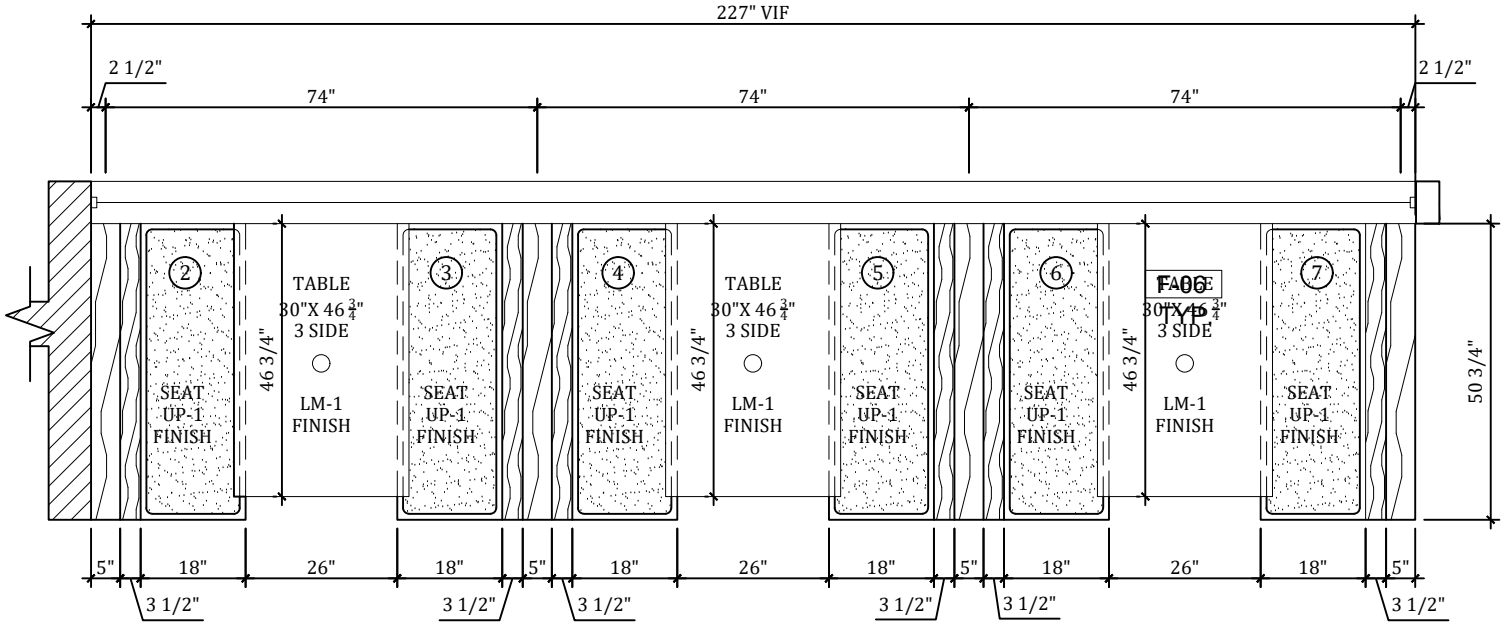

~ PLAN VIEW
SCALE: 3/8" = 1'-00"

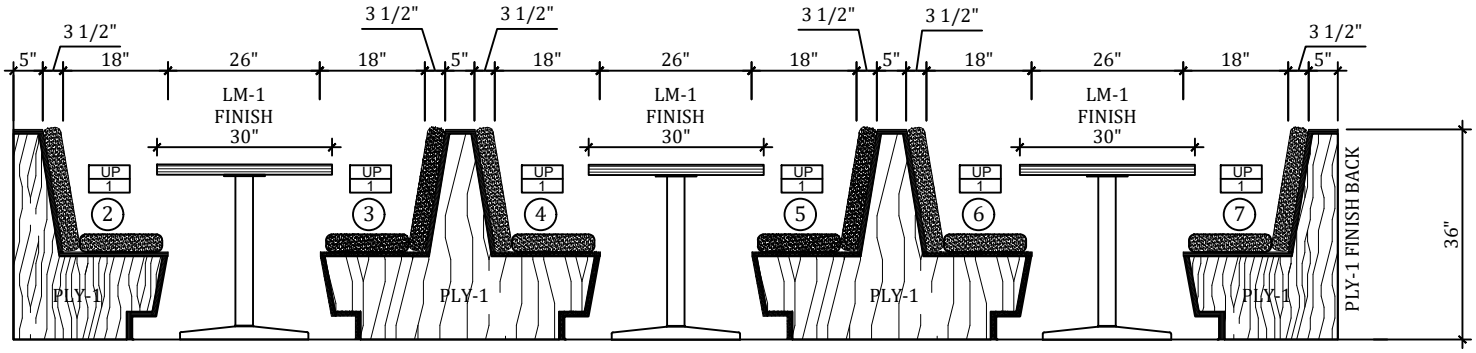

1 ELEVATION
SCALE: 3/8" = 1'-00"

PULLMAN BOOTHS AND TABLES

FOR REFERENCE ONLY

NOT FOR FABRICATION

THESE DRAWINGS REPRESENT DESIGN INTENT ONLY AND DO NOT INCLUDE VERIFICATION OF ANY STRUCTURAL, MECHANICAL, ELECTRICAL, OR PLUMBING DESIGN. ALL DIMENSIONS AND CONDITIONS MUST BE VERIFIED IN THE FIELD AND AREAS AND AREA MEASUREMENTS OF MILLWORK CONCEPTS, INC. PRODUCTS COMPONENTS FROM AVAILABLE INFORMATION AND SHALL BE VERIFIED AND APPROVED BY ALL PROFESSIONALS CONTRACTORS, SUPPLIERS, AND VENDORS TO BE FAMILIAR WITH APPLICABLE CODES, REGULATIONS, ENGINEERING, CALCULATIONS, AND OTHER ITEMS AFFECTING THEIR WORK.
THIS DRAWING IS PROPERTY OF MILLWORK CONCEPTS, INC. AND MUST BE RETURNED UPON REQUEST. ANY USE OF INFORMATION CONTAINED HEREIN FOR ANY PURPOSE OTHER THAN THE WORK FOR WHICH IT WAS PREPARED, CONSTITUTES WORK THAT MUST BE AUTHORIZED IN WRITING.

No.	REVISION	DATE
1	REVISION	00-00-00

MCI
Millwork Concepts, Inc.
12345 Front Street, Norwalk, CA 90650
Ph. 565-355-7272, Fax 562-406-8888
Alfredo Castillo

APROVED BY :

DATE:

PITFIRE ARTISAN PIZZA
PITFIRE PIZZA
CARLSBAD
7720 EL CAMINO REAL CARLSBAD
CALIFORNIA 92009

ARCHITECT: CONQUEST ARCHITECTURE
CONTRACTOR: -
DRAW BY ALGUTVER
PROJ. MGR. ALFREDO CASTILLO
SCALE: AS NOTED
DATE: 06-22-2023
SHEET: MW-11

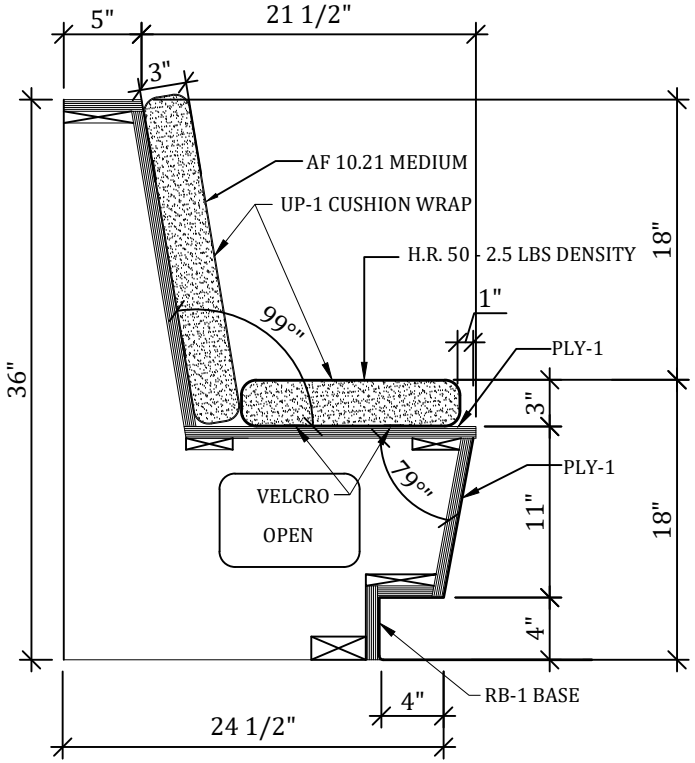

A SECTION SINGLE BOOTH
SCALE: 1" = 1'-00"

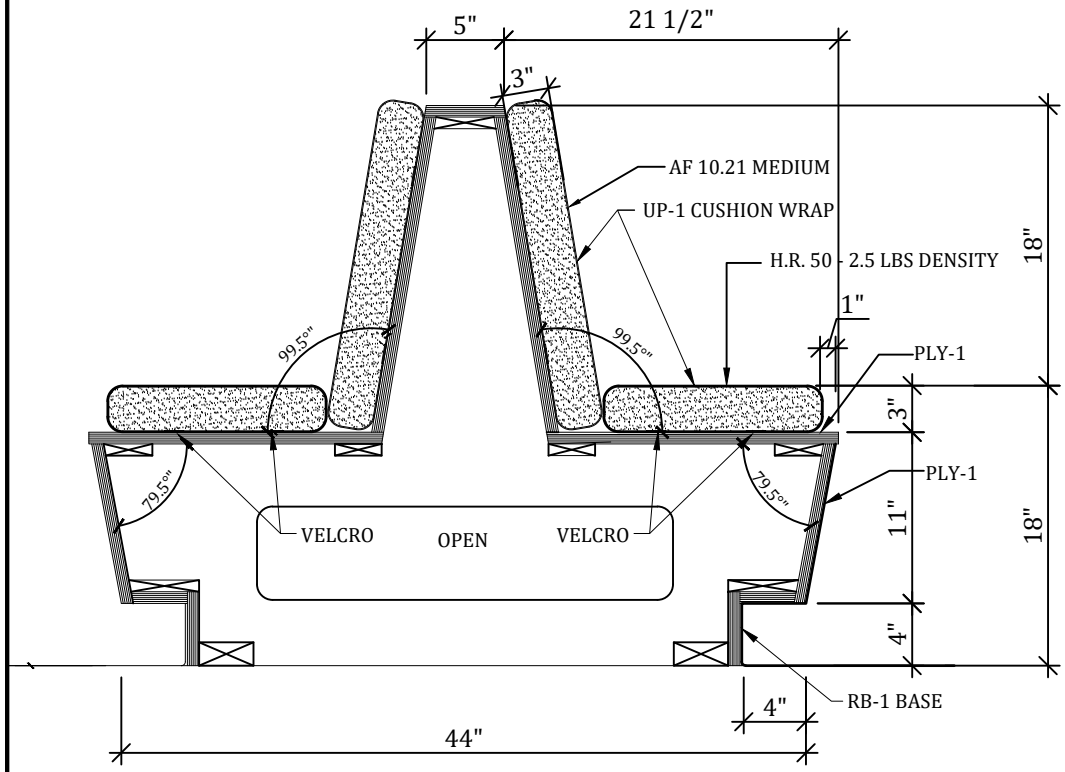

B SECTION DOUBLE BOOTH
SCALE: 1" = 1'-00"

PULLMAN BOOTHS AND TABLES

FOR REFERENCE ONLY

NOT FOR FABRICATION

THESE DRAWINGS REPRESENT DESIGN INTENT ONLY AND DO NOT INCLUDE VERIFICATION OF ANY STRUCTURAL, MECHANICAL, ELECTRICAL, OR PLUMBING FEATURES. CONTRACTOR SHALL VERIFY ALL DIMENSIONS, CONDITIONS, MATERIALS AND ARRANGEMENTS OF MILLWORK CONCEPTS, INC. PROJECT COMPONENTS FROM AVAILABLE INFORMATION AND SHALL BE VERIFIED AND APPROVED BY ALL PROFESSIONALS CONTROLLING THE PROJECT. CONTRACTOR SHALL COMPLY WITH APPLICABLE CODES, REGULATIONS, ENGINEERING, CALCULATIONS, AND INSTRUMENTS OF CONSTRUCTION.
THIS DRAWING IS PROPERTY OF MILLWORK CONCEPTS, INC. AND MUST BE RETURNED UPON REQUEST. ANY USE OF INFORMATION CONTAINED HEREIN FOR ANY OTHER PURPOSE OTHER THAN THAT INTENDED BY MILLWORK CONCEPTS, INC. MUST BE AUTHORIZED IN WRITING.

No.	REVISION	DATE
1	REVISION	00-00-00

MCI
Millwork Concepts, Inc.
12345 Front Street, Norwalk, CA 90650
Ph. 565-355-7272, Fax 562-406-8888
Alfredo Castillo

APROVED BY :

DATE:

PITFIRE ARTISAN PIZZA
PITFIRE PIZZA
CARLSBAD
7720 EL CAMINO REAL CARLSBAD
CALIFORNIA 92009

ARCHITECT: CONQUEST ARCHITECTURE
CONTRACTOR: -
DRAW BY ALGUTVER
PROJ. MGR. ALFREDO CASTILLO
SCALE: AS NOTED
DATE: 06-22-2023
SHEET: MW-11.1

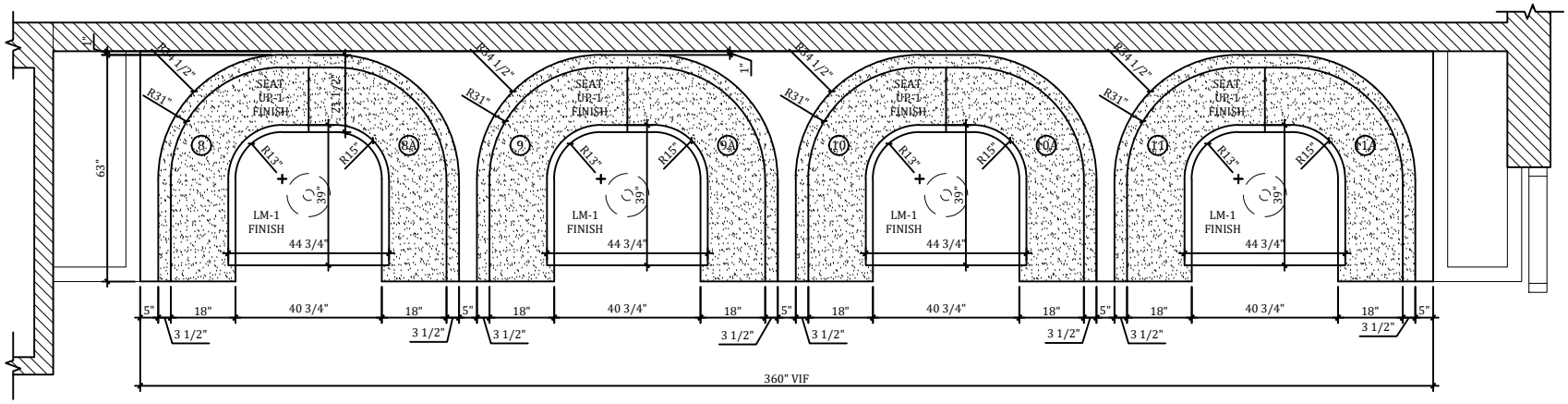

~ PLAN VIEW
SCALE: 3/8" = 1'-00"

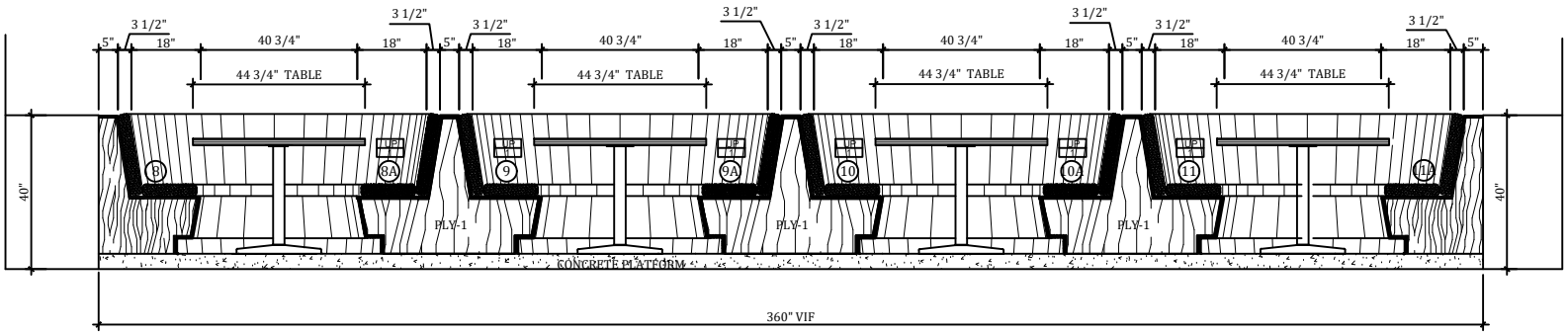

1 ELEVATION
SCALE: 3/8" = 1'-00"

HALF CIRCLE BOOTHS AND TABLES

FOR REFERENCE ONLY

NOT FOR FABRICATION

THESE DRAWINGS REPRESENT DESIGN INTENT ONLY AND DO NOT INCLUDE VERIFICATION OF ANY STRUCTURAL, MECHANICAL, ELECTRICAL, OR PLUMBING. THE INFORMATION CONTAINED HEREIN MUST BE VERIFIED AND COORDINATED WITH ALL AVAILABLE INFORMATION AND SHALL BE VERIFIED AND APPROVED BY ALL APPLICABLE CODES, REGULATIONS, ENGINEERING, CALCULATIONS, AND AND ARRANGEMENTS OF MILLWORK CONCEPTS, INC. PRODUCTS COMPONENTS PRIOR TO THE FABRICATION OF ANY PRODUCT. THIS DRAWING IS PROPRIETARY TO MILLWORK CONCEPTS, INC. AND MUST BE RETURNED UPON REQUEST. ANY USE OF INFORMATION CONTAINED HEREIN FOR ANY PURPOSE OTHER THAN THE PROJECT FOR WHICH IT WAS PREPARED IS NOT TO BE AUTHORIZED IN WRITING.

No.	REVISION	DATE
1	REVISION	00-00-00

MCI
Millwork Concepts, Inc.
12345 Front Street, Norwalk, CA 90650
Ph. 565-355-7272, Fax 562-406-8888
Alfredo Castillo

APROVED BY :

DATE:

PITFIRE ARTISAN PIZZA
PITFIRE PIZZA
CARLSBAD
7720 EL CAMINO REAL, CARLSBAD
CALIFORNIA 92009

ARCHITECT: CONQUEST ARCHITECTURE
CONTRACTOR: -
DRAW BY ALGUTVER
PROJ. MGR. ALFREDO CASTILLO
SCALE: AS NOTED
DATE: 06-22-2023
SHEET: MW-12

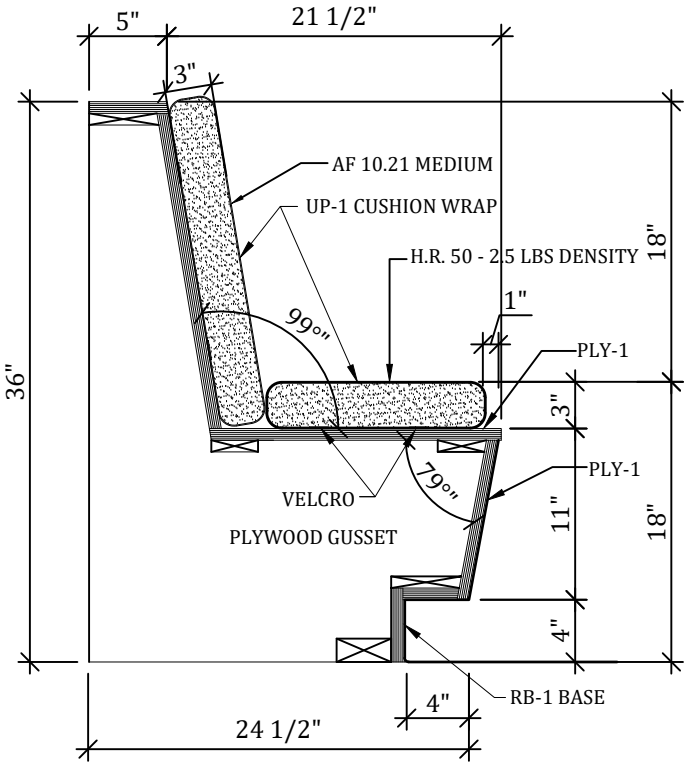

A SECTION SINGLE BOOTH
SCALE: 1" = 1'-00"

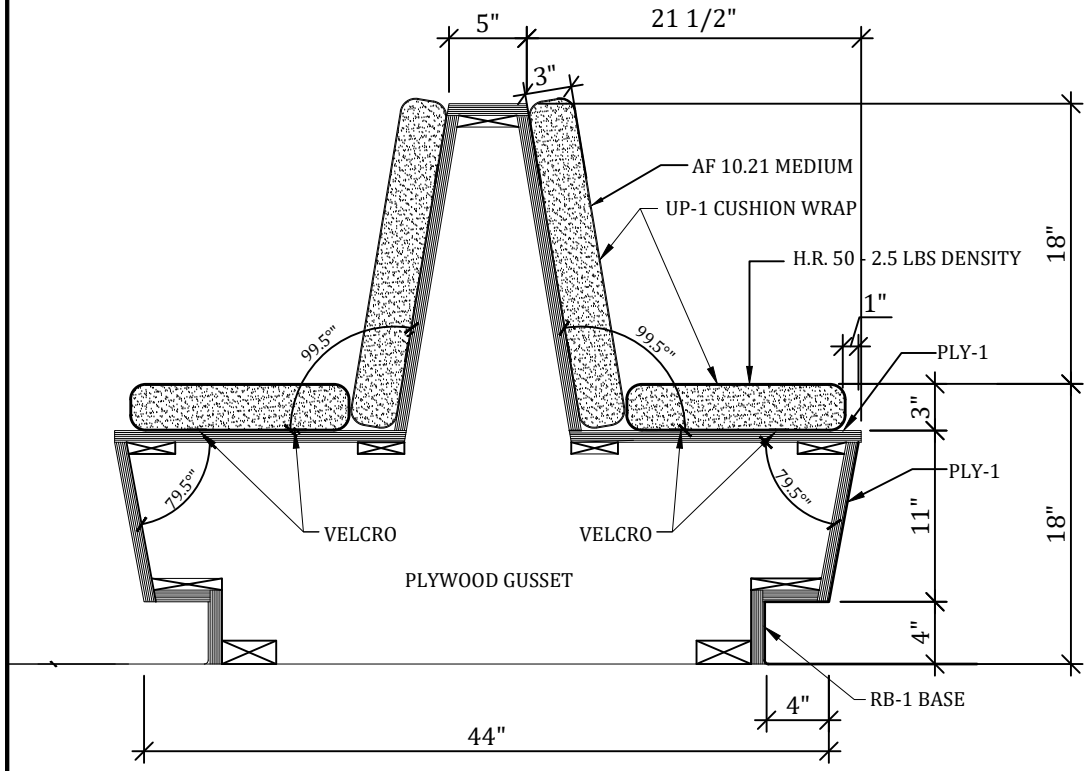

B SECTION DOUBLE BOOTH
SCALE: 1" = 1'-00"

HALF CIRCLE BOOTHS AND TABLES

FOR REFERENCE ONLY

NOT FOR FABRICATION

THESE DRAWINGS REPRESENT DESIGN INTENT ONLY AND DO NOT INCLUDE VERIFICATION OF ANY STRUCTURAL, MECHANICAL, ELECTRICAL, OR PLUMBING FEATURES. CONTRACTOR SHALL BE RESPONSIBLE FOR ALL MATERIALS, DIMENSIONS AND ARRANGEMENTS OF MILLWORK CONCEPTS, INC. PROJECT COMPONENTS FROM AVAILABLE INFORMATION AND SHALL BE VERIFIED AND APPROVED BY ALL PERTINENT AUTHORITIES HAVING JURISDICTION. CONTRACTOR IS RESPONSIBLE WITH APPLICABLE CODES, REGULATIONS, ENGINEERING, CALCULATIONS, AND PERMITS FOR ALL CONDITIONS.
THIS DRAWING IS PROPERTY OF MILLWORK CONCEPTS, INC. AND MUST BE RETURNED UPON REQUEST. ANY USE OF INFORMATION CONTAINED HEREIN FOR ANY OTHER PURPOSE WITHOUT WRITTEN CONSENT FROM MILLWORK CONCEPTS, INC. MUST BE AUTHORIZED IN WRITING.

No.	REVISION	DATE
1	REVISION	00-00-00

MCI
Millwork Concepts, Inc.
12345 Front Street, Norwalk, CA 90650
Ph. 565-355-7272, Fax 562-406-8888
Alfredo Castillo

APROVED BY :

DATE:

PITFIRE ARTISAN PIZZA
PITFIRE PIZZA
CARLSBAD
7720 EL CAMINO REAL CARLSBAD
CALIFORNIA 92009

ARCHITECT: CONQUEST ARCHITECTURE
CONTRACTOR: -
DRAW BY ALGUTVER
PROJ. MGR. ALFREDO CASTILLO
SCALE: AS NOTED
DATE: 06-22-2023
SHEET: MW-12.1

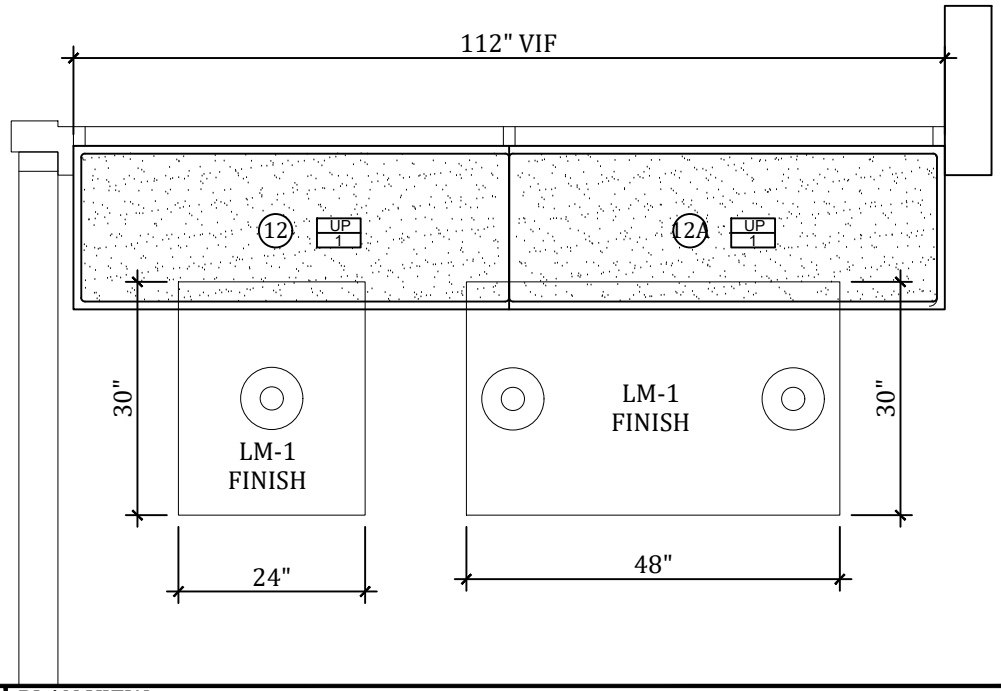

~ PLAN VIEW
SCALE: 1/2" = 1'-00"

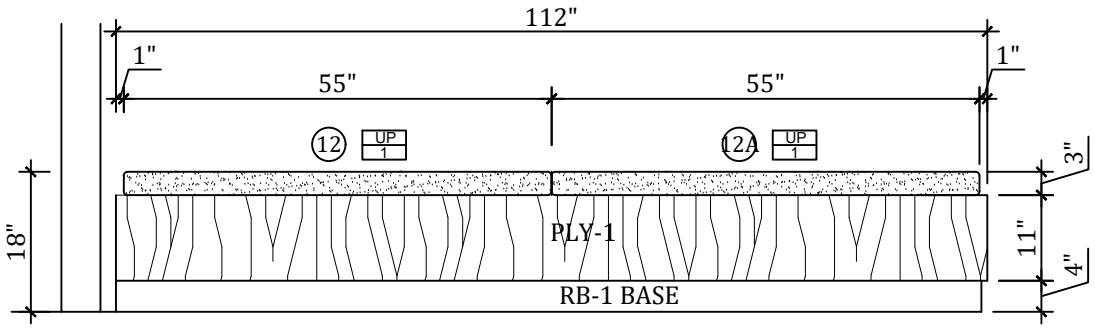

1 ELEVATION
SCALE: 1/2" = 1'-00"

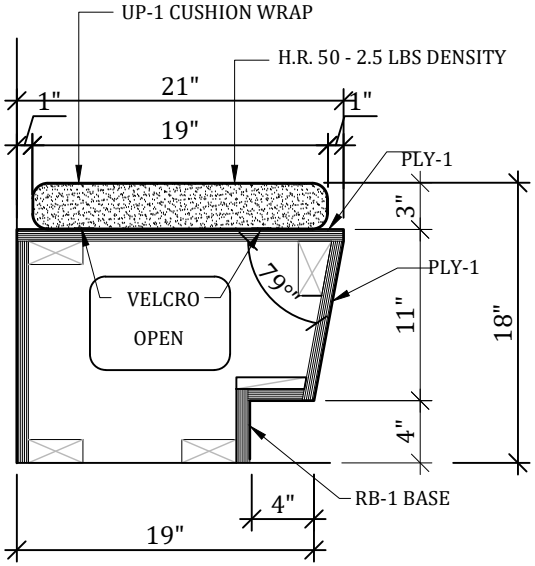

A SECTION
SCALE: 1" = 1'-00"

BENCH WITHOUT BACK AND TABLES

FOR REFERENCE ONLY

NOT FOR FABRICATION

THESE DRAWINGS REPRESENT DESIGN INTENT ONLY AND DO NOT INCLUDE VERIFICATION OF ANY STRUCTURAL, MECHANICAL, ELECTRICAL, OR PLUMBING FEATURES. CONTRACTOR SHALL BE RESPONSIBLE FOR ALL DIMENSIONS AND CONDITIONS AVAILABLE INFORMATION AND SHALL BE VERIFIED AND APPROVED BY ALL PROFESSIONALS CONCERNED PRIOR TO THE FABRICATION OF ANY PROJECT COMPONENTS WITH APPLICABLE CODES, REGULATIONS, ENGINEERING, CALCULATIONS, AND INDUSTRY STANDARDS. CONTRACTOR SHALL REPORT ALL DISCREPANCIES IMMEDIATELY. THIS DRAWING IS PROPERTY OF MILLWORK CONCEPTS, INC. AND MUST BE RETURNED UPON REQUEST. ANY USE OF INFORMATION CONTAINED HEREIN FOR ANY OTHER PURPOSE THAN THAT INTENDED BY MILLWORK CONCEPTS, INC. IS NOT TO BE AUTHORIZED IN WRITING.

No.	REVISION	DATE
1	REVISION	00-00-00

MCI
Millwork Concepts, Inc.
12345 Front Street, Norwalk, CA 90650
Ph: 565-355-7272, Fax 562-406-8888
Alfredo Castillo

APROVED BY :

DATE:

PITFIRE ARTISAN PIZZA
PITFIRE PIZZA
CARLSBAD
7720 EL CAMINO REAL CARLSBAD
CALIFORNIA 92009

ARCHITECT: CONQUEST ARCHITECTURE
CONTRACTOR: -
DRAW BY ALGUTVER
PROJ. MGR. ALFREDO CASTILLO
SCALE: AS NOTED
DATE: 06-22-2023
SHEET MW-13

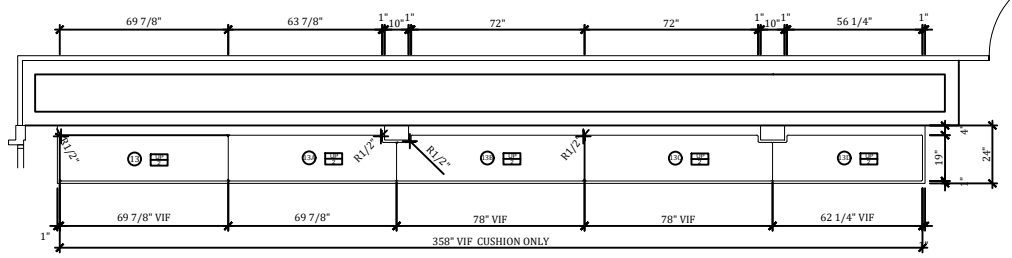

~ PLAN VIEW
SCALE: 1/4" = 1'-00"

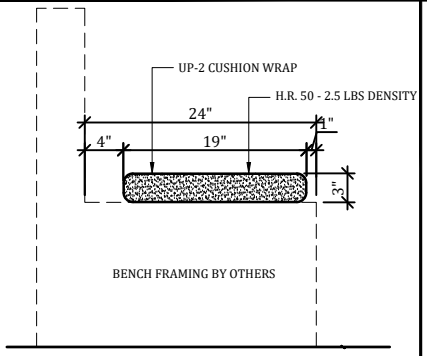

A SECTION
SCALE: 1" = 1'-00"

EXTERIOR BENCH

FOR REFERENCE ONLY

NOT FOR FABRICATION

THIS DRAWING IS PROPRIETARY AND CONFIDENTIAL THE INFORMATION CONTAINED HEREIN IS THE PROPERTY OF MCI MILLWORK CONCEPTS, INC. THIS DRAWING IS TO BE USED FOR THE PURPOSE OF ESTIMATING, FABRICATION, INSTALLATION, OR REFERENCE ONLY. THIS DRAWING MAY NOT BE REPRODUCED, DISTRIBUTED, OR DISCLOSED TO ANY THIRD PARTY WITHOUT THE EXPRESS WRITTEN PERMISSION OF MCI MILLWORK CONCEPTS, INC. ALL RIGHTS ARE RESERVED. COPYRIGHT 2009.
MCI MILLWORK CONCEPTS, INC. 1111 CORPORATE WAY, SACRAMENTO, CA 95691 PH: 916.395.7270 FAX: 916.395.7275 EMAIL: MCI@MCIMILLWORK.COM

No.	REVISION	DATE
1	REVISION	00-00-00

MCI
Millwork Concepts, Inc.
1111 Corporate Way
Sacramento, CA 95691
Ph: 916.395.7270, Fax: 916.395.7275
Attn: Carl Ito

APPROVED BY:

DATE:

PITFIRE ARTISAN PIZZA
PITFIRE PIZZA
CARLSBAD
7720 EL CAMINO REAL, CARLSBAD
CALIFORNIA 92009

ARCHITECT: CONQUEST ARCHITECTURE
CONTRACTOR:
DRAW BY: ALGUTVER
PROJ. MGR.: ALFREDO CASTILLO
SCALE: AS NOTED
DATE: 06-22-2023
SHEET: MW-14